POLARIS PUMPS

ORIGINAL SOLUTIONS. NO COMPROMISES.

ASSEMBLY INSTRUCTIONS, JET WATER PERFORMANCE CURVES, GA DRAWINGS OPTIONAL WATER JET RING, SERIES TBM, SERIES MSP					1of 1
DOCUMENT NBR. :	**A0659**	REVISION:	**0**	EFFECTIVE DATE:	**08/05/2012**

0		NEW	UJB		08/05/2012
REV	ECN	CHANGE DESCRIPTION	BY	APPV'D	DATE

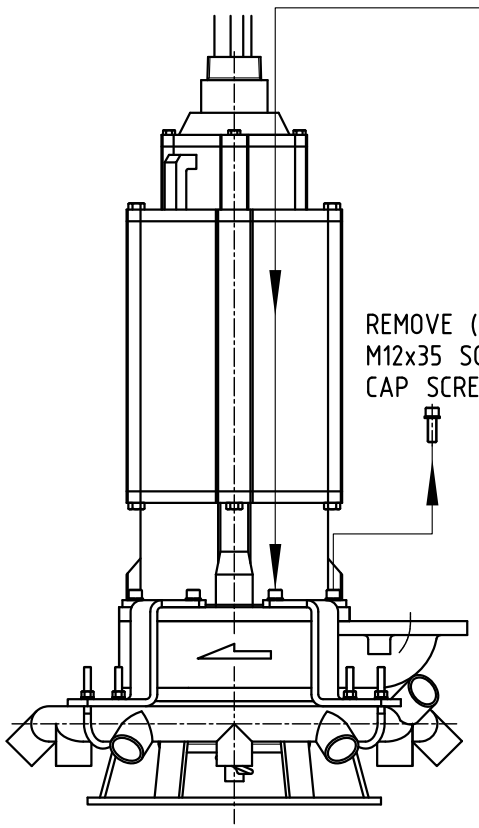

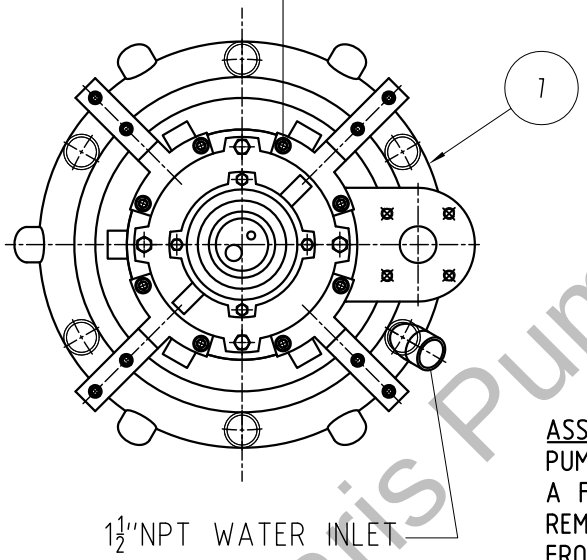

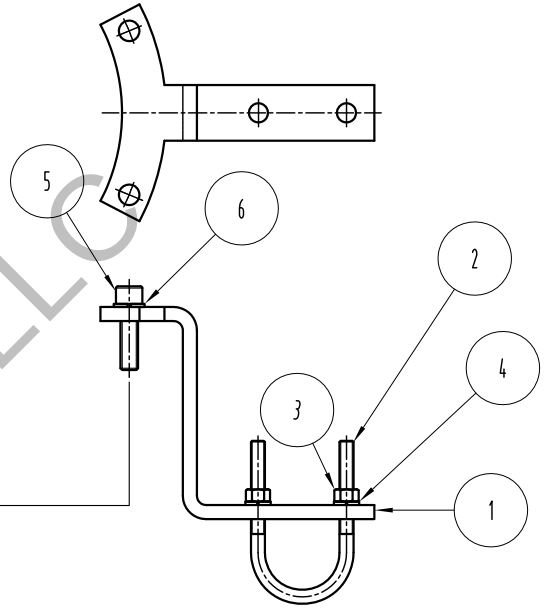

ASSEMBLY INSTRUCTIONS:

PUMP MUST BE STANDING UPRIGHT ON THE PUMP STAND ON A FLAT AND LEVEL SURFACE.

REMOVE THE ORIGINAL (8) M12x35 SOCKET HEAD CAP SCREWS FROM THE MOTOR FLANGE.

POSITION AND ATTACH THE (4) MOUNTING BRACKETS (ITEM 1) AS SHOWN WITH THE (8) M12x45 SOCKET HEAD CAP SCREWS AND LOCK WASHERS (ITEMS 5,6). APPLY Loctite© 242 AND RE-TIGHTEN TO 62 Nm (46 lb/ft).

RAISE THE PUMP OFF THE GROUND AND POSITION THE WATER JET RING ASSEMBLY UNDER THE PUMP STAND WITH THE WATER INLET POSITIONED AS SHOWN.

LOWER THE PUMP BACK TO THE FLOOR. USE THE ⅜ U-BOLTS, HEX NUTS AND LOCK WASHERS (ITEMS 2,3,4) TO ATTACH THE WATER JET RING (ITEM 7) TO THE BRACKETS. APPLY Loctite© 242 AND TIGHTEN TO 62 Nm (46 lb/ft).

ASSEMBLY INSTRUCTIONS **OPTIONAL WATER JET RING** **TBM 50LH, 75LH / MSP2, 3**	
DRAWING NBR.: **A0655**	REV.: **0**
EFFECTIVE DATE : **08/05/2012**	

POLARIS PUMPS

PUMP MODEL	JET RING BRACKET KIT	WATER JET RING
TBM50LH / MSP2	973.200.05.01628	973.200.05.01577
TBM75LH / MSP3		
FOR WATER JET RING PERFORMANCE CURVE SEE: **A0638**		

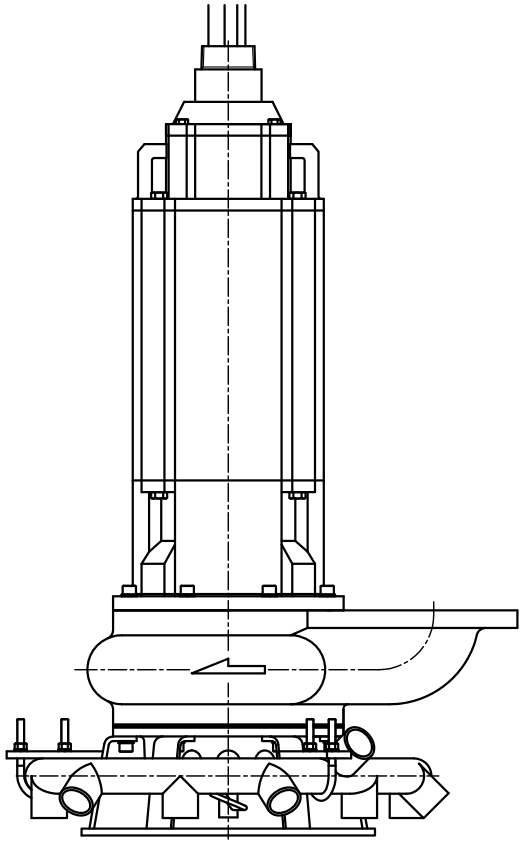

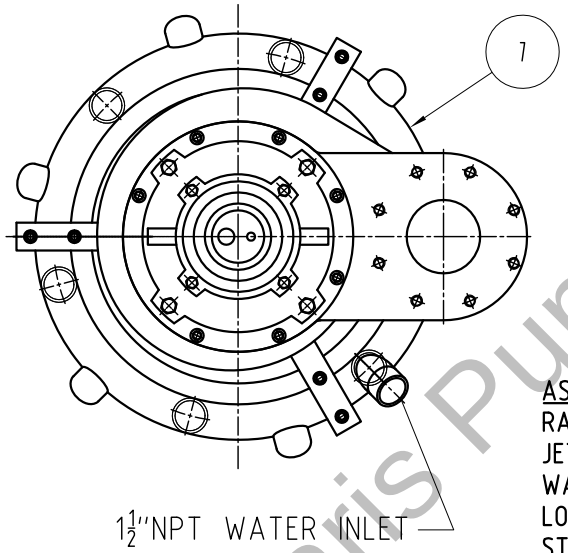

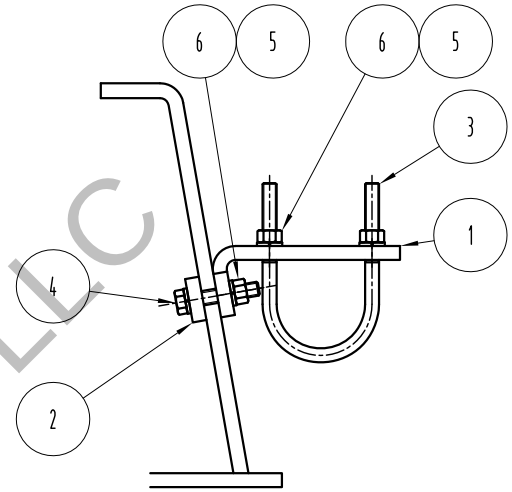

ASSEMBLY INSTRUCTIONS:

RAISE THE PUMP OFF THE GROUND AND POSITION THE WATER JET RING ASSEMBLY UNDER THE PUMP STAND WITH THE WATER INLET POSITIONED AS SHOWN.

LOWER THE PUMP BACK ONTO THE FLOOR. PUMP MUST BE STANDING UPRIGHT ON THE PUMP STAND ON A FLAT AND LEVEL SURFACE.

POSITION AND LOOSELY ATTACH THE (3) MOUNTING BRACKETS AND CLAMP PLATES (ITEM 1/2) TO THE PUMP STAND LEGS AS SHOWN WITH THE (6) ⅜x2 HEX HEAD CAP SCREWS, HEX NUTS AND LOCK WASHERS (ITEMS 4/5/6).

USE THE U-BOLTS, HEX NUTS AND LOCK WASHERS (ITEMS 3/5/6) TO ATTACH THE WATER JET RING (ITEM 7) TO THE BRACKETS. APPLY Loctite© 242 AND TIGHTEN ALL FASTENERS TO 62 Nm (46 lb/ft).

ASSEMBLY INSTRUCTIONS **OPTIONAL WATER JET RING** **TBM 100LH / MSP4**	
DRAWING NBR.: **A0656**	REV.: **0**
EFFECTIVE DATE : **08/05/2012**	

POLARIS PUMPS

PUMP MODEL	JET RING BRACKET KIT	WATER JET RING
TBM100LH / MSP4	973.200.05.01572	973.200.05.01577
FOR WATER JET RING PERFORMANCE CURVE SEE: A0638		

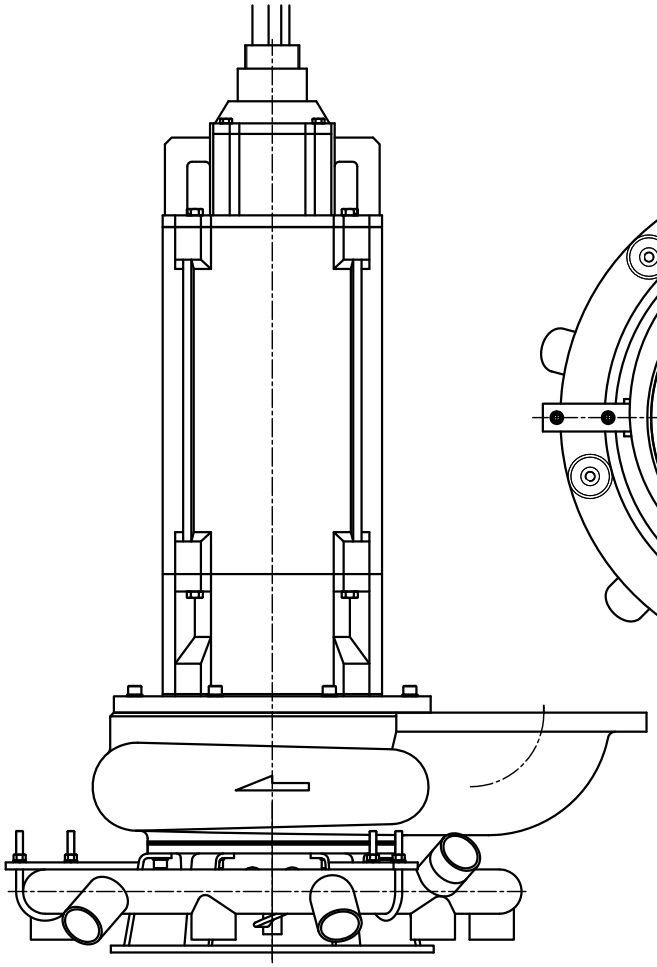

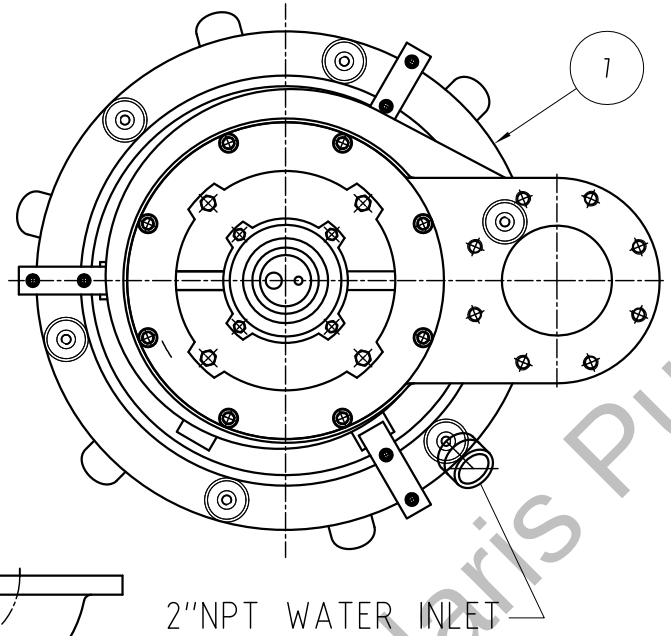

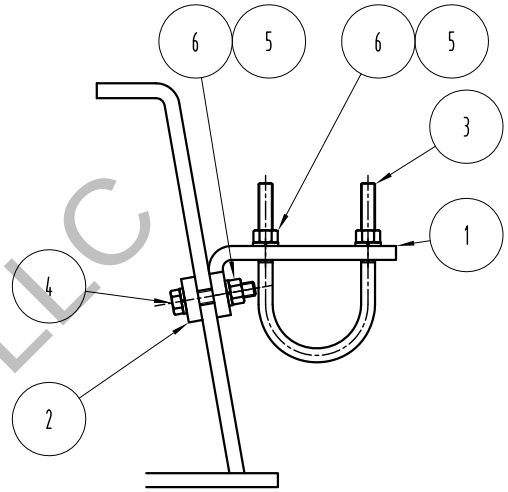

ASSEMBLY INSTRUCTIONS:

RAISE THE PUMP OFF THE GROUND AND POSITION THE WATER JET RING ASSEMBLY UNDER THE PUMP STAND WITH THE WATER INLET POSITIONED AS SHOWN.

LOWER THE PUMP BACK ONTO THE FLOOR. PUMP MUST BE STANDING UPRIGHT ON THE PUMP STAND ON A FLAT AND LEVEL SURFACE.

POSITION AND LOOSELY ATTACH THE (3) MOUNTING BRACKETS AND CLAMP PLATES (ITEM 1/2) TO THE PUMP STAND LEGS AS SHOWN WITH THE (6) ⅜x2 HEX HEAD CAP SCREWS, HEX NUTS AND LOCK WASHERS (ITEMS 4/5/6).

USE THE U-BOLTS, HEX NUTS AND LOCK WASHERS (ITEMS 3/5/6) TO ATTACH THE WATER JET RING (ITEM 7) TO THE BRACKETS. APPLY Loctite© 242 AND TIGHTEN ALL FASTENERS TO 62 Nm (46 lb/ft).

ASSEMBLY INSTRUCTIONS **OPTIONAL WATER JET RING** **TBM 150LH, 75MH, 100MH / MSP6, MSP3MH, MSP4MH**	
DRAWING NBR.: **A0657**	REV.: **0**
EFFECTIVE DATE : **08/05/2012**	

POLARIS PUMPS

PUMP MODEL	JET RING BRACKET KIT	WATER JET RING
TBM150LH / MSP6	973.200.05.01539	973.200.05.01545
TBM75MH / MSP3MH	973.200.05.01550	
TBM100MH / MSP4MH		
FOR WATER JET RING PERFORMANCE CURVE SEE: A0637		

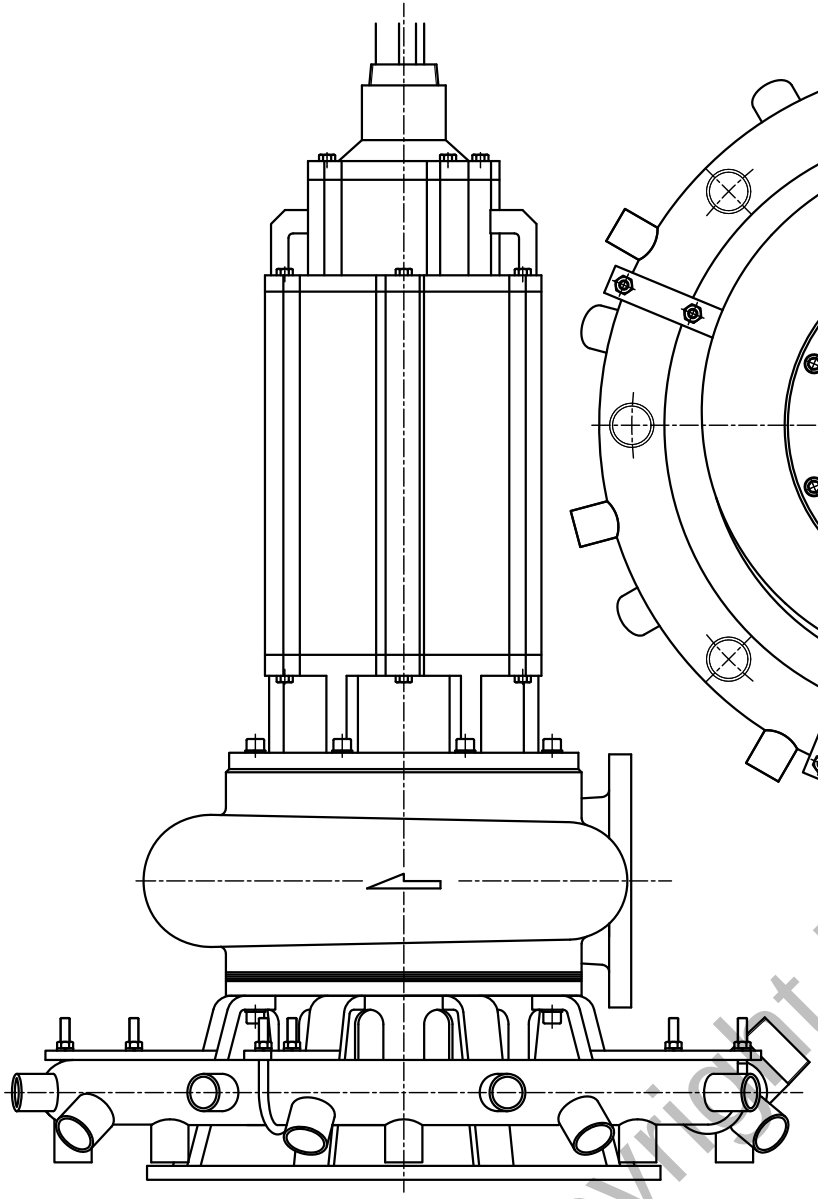

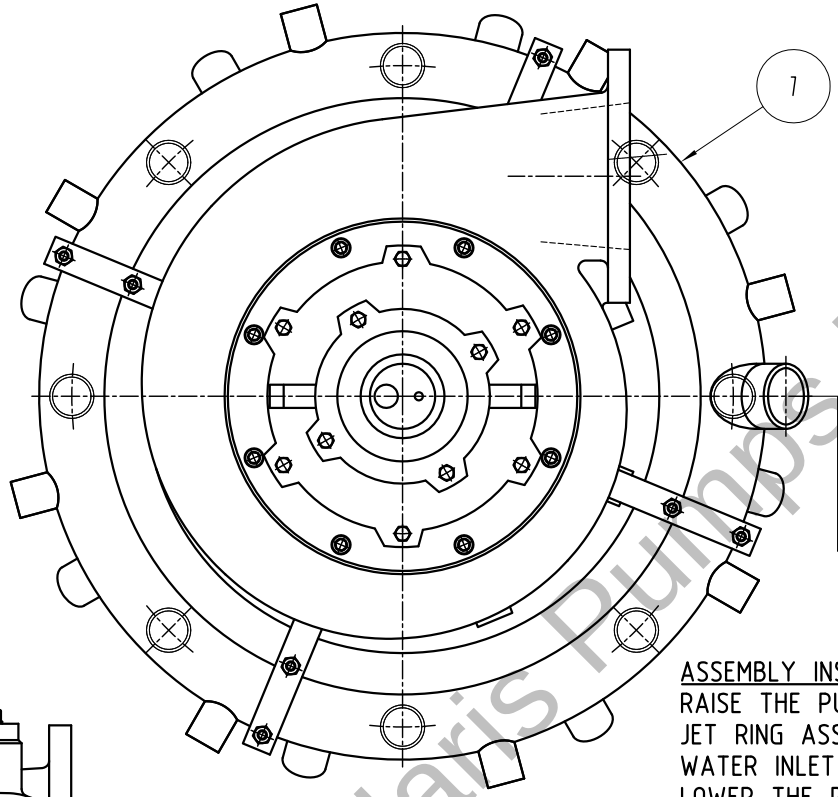

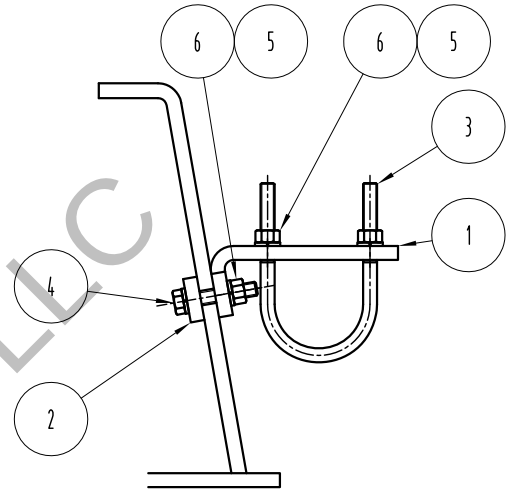

ASSEMBLY INSTRUCTIONS:

RAISE THE PUMP OFF THE GROUND AND POSITION THE WATER JET RING ASSEMBLY UNDER THE PUMP STAND WITH THE WATER INLET POSITIONED AS SHOWN.

LOWER THE PUMP BACK ONTO THE FLOOR. PUMP MUST BE STANDING UPRIGHT ON THE PUMP STAND ON A FLAT AND LEVEL SURFACE.

POSITION AND LOOSELY ATTACH THE (4) MOUNTING BRACKETS AND CLAMP PLATES (ITEM 1/2) TO THE PUMP STAND LEGS AS SHOWN WITH THE (8) ½x2¾ HEX HEAD CAP SCREWS, HEX NUTS AND LOCK WASHERS (ITEMS 4/5/6).

USE THE U-BOLTS, HEX NUTS AND LOCK WASHERS (ITEMS 3/5/6) TO ATTACH THE WATER JET RING (ITEM 7) TO THE BRACKETS. APPLY Loctite© 242 AND TIGHTEN ALL FASTENERS TO 75 Nm (55 lb/ft).

ASSEMBLY INSTRUCTIONS **OPTIONAL WATER JET RING** **TBM 200LH, 150MH, 200MH / MSP8, MSP6MH, MSP8MH**	
DRAWING NBR.: **A0658**	REV.: **0**
EFFECTIVE DATE : **08/05/2012**	

POLARIS PUMPS

PUMP MODEL	JET RING BRACKET KIT	WATER JET RING
TBM200LH / MSP8	973.200.05.01555	973.200.05.01516
TBM150MH / MSP6MH	973.200.05.01556	
TBM200MH / MSP8MH	973.200.05.01521	
FOR WATER JET RING PERFORMANCE CURVE SEE:	A0636	

POLARIS PUMPS

PUMP MODEL	CURVE NBR.: **A0638**	JET RING PART NUMBER:	**971.200.05.01576 (A53Gr.B)** **971.200.05.01577 (316SS)**
TBM50LH / MSP2 **TBM75LH / MSP3** **TBM100LH / MSP4**	REVISION : **0**		
	TEST NBR.: **N/A**	JET RING WATER INLET ø:	**1 1/2" NPT**
	EFFECTIVE DATE : **08/01/12**	PERFORMANCE FOR CLEAR WATER @ 68°F/20°C AND 1.0 S.G. MAXIMUM JET RING WORKING PRESSURE = 150PSI	
	APPROVED BY : **UJB**		

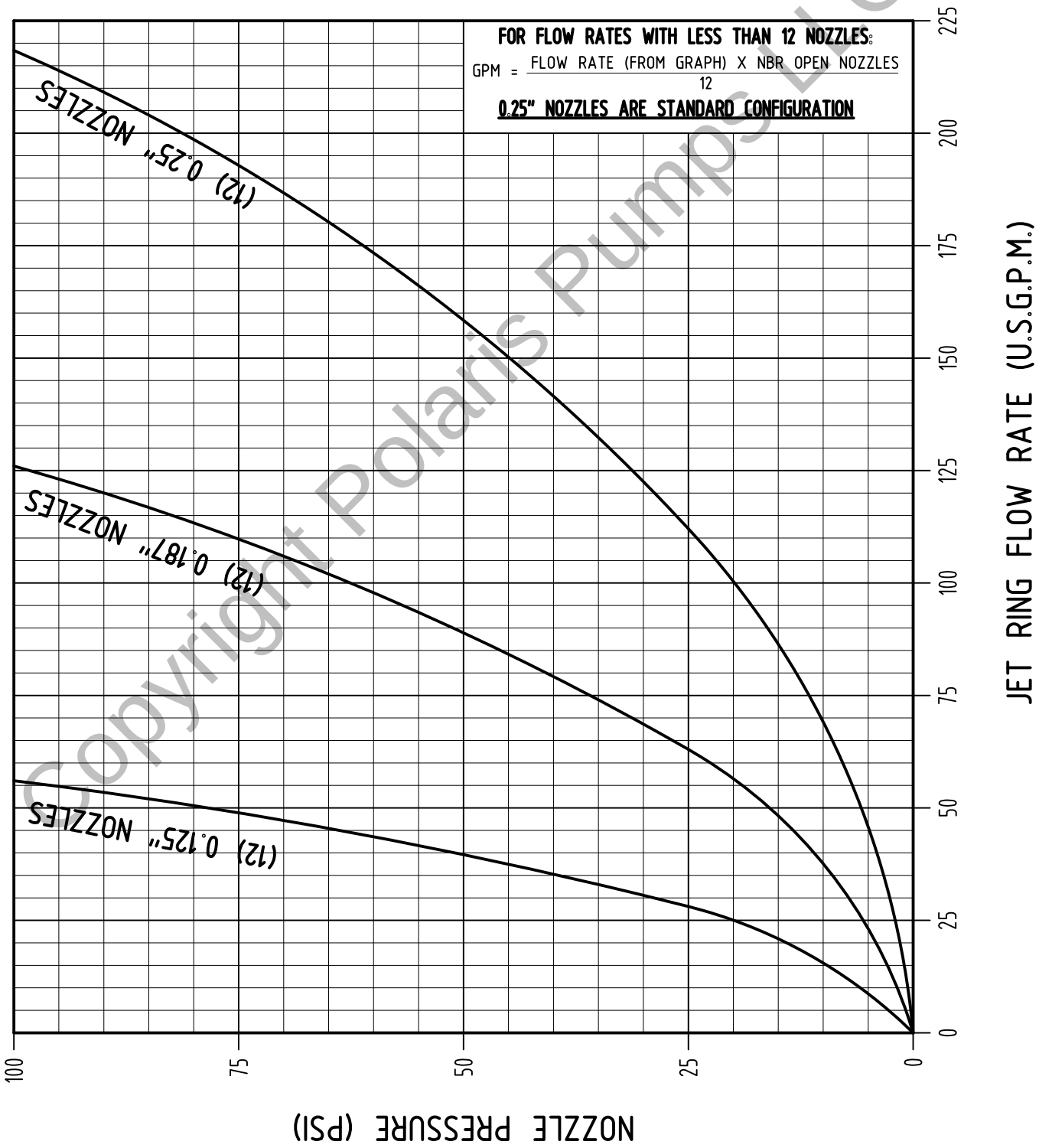

POLARIS PUMPS

PUMP MODEL	CURVE NBR.: **A0637**	JET RING PART NUMBER: **971.200.05.01545 (A53Gr.B)**
TBM150LH / MSP6	REVISION : **0**	
TBM75MH / MSP3MH	TEST NBR.: **N/A**	JET RING WATER INLET ø: **2" NPT**
TBM100MH / MSP4MH	EFFECTIVE DATE : **08/01/12**	PERFORMANCE FOR CLEAR WATER @ 68°F/20°C AND 1.0 S.G.
	APPROVED BY : **UJB**	MAXIMUM JET RING WORKING PRESSURE = 150PSI

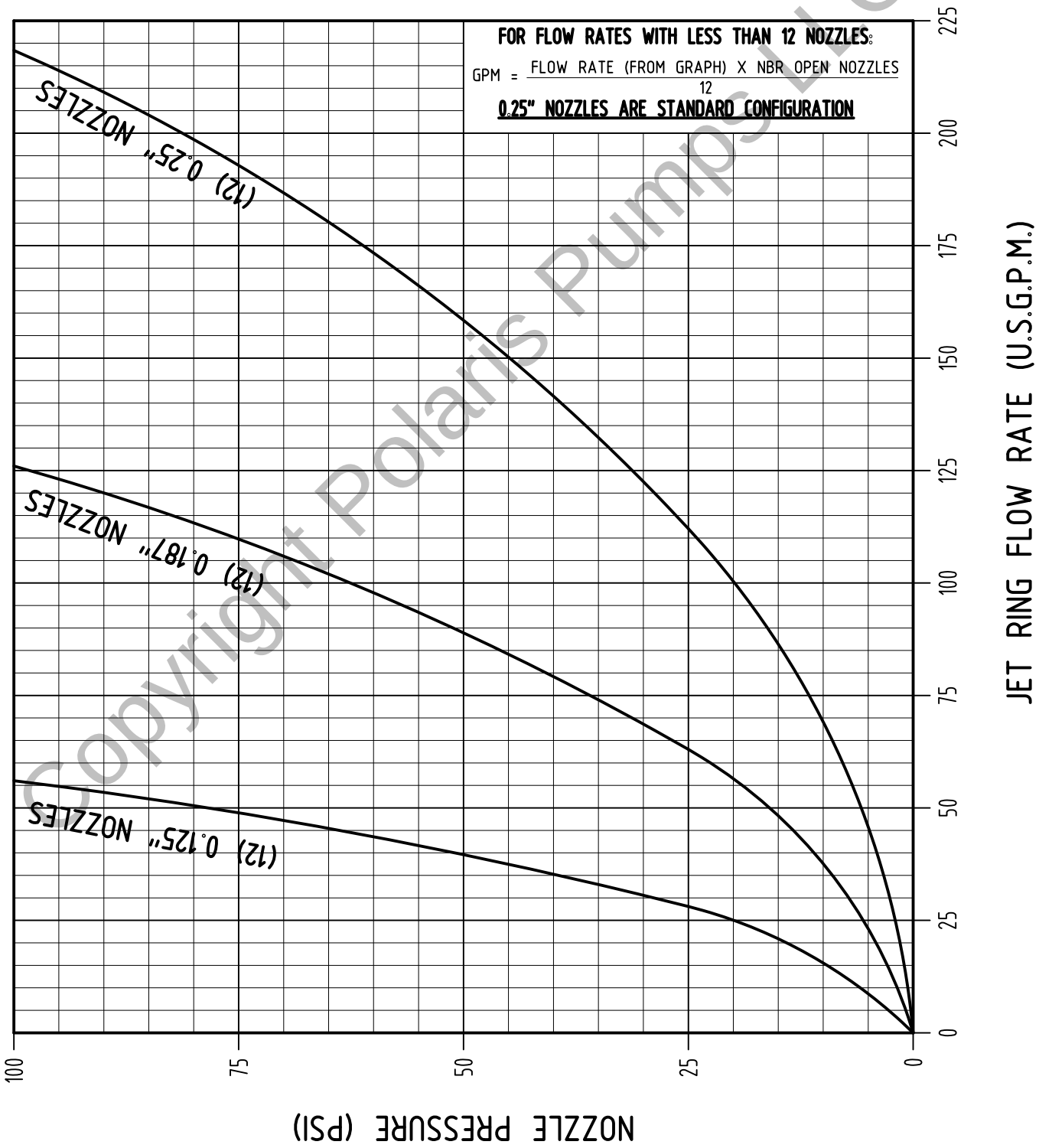

POLARIS PUMPS

PUMP MODEL	CURVE NBR.: **A0636**	JET RING PART NUMBER: **971.200.05.01516 (A53Gr.B)**
TBM200LH / MSP8 **TBM150MH / MSP6MH** **TBM200MH / MSP8MH**	REVISION : **0**	
	TEST NBR.: **N/A**	JET RING WATER INLET ø: **3" NPT**
	EFFECTIVE DATE : **08/01/12**	PERFORMANCE FOR CLEAR WATER @ 68°F/20°C AND 1.0 S.G. MAXIMUM JET RING WORKING PRESSURE = 150PSI
	APPROVED BY : **UJB**	

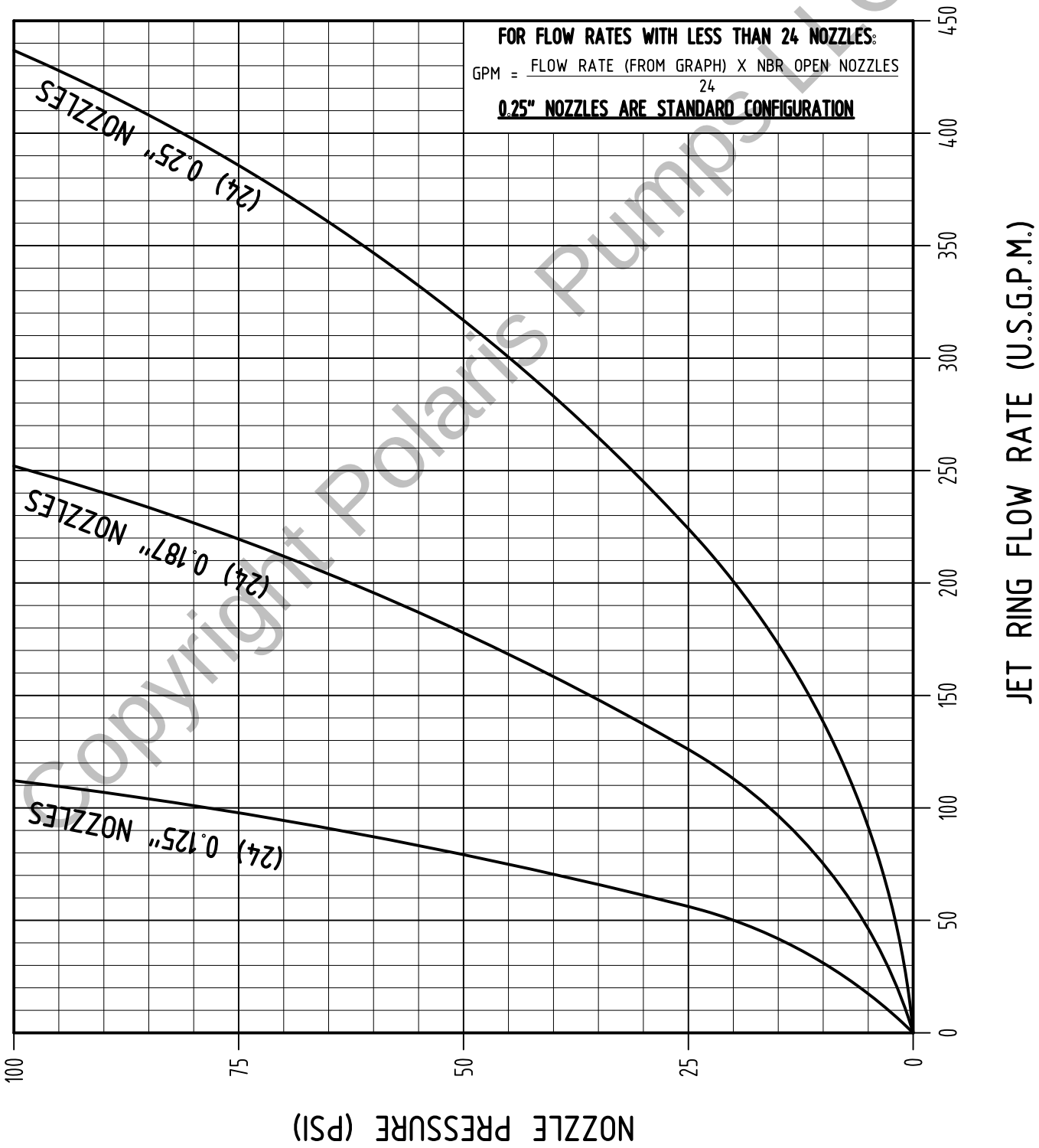

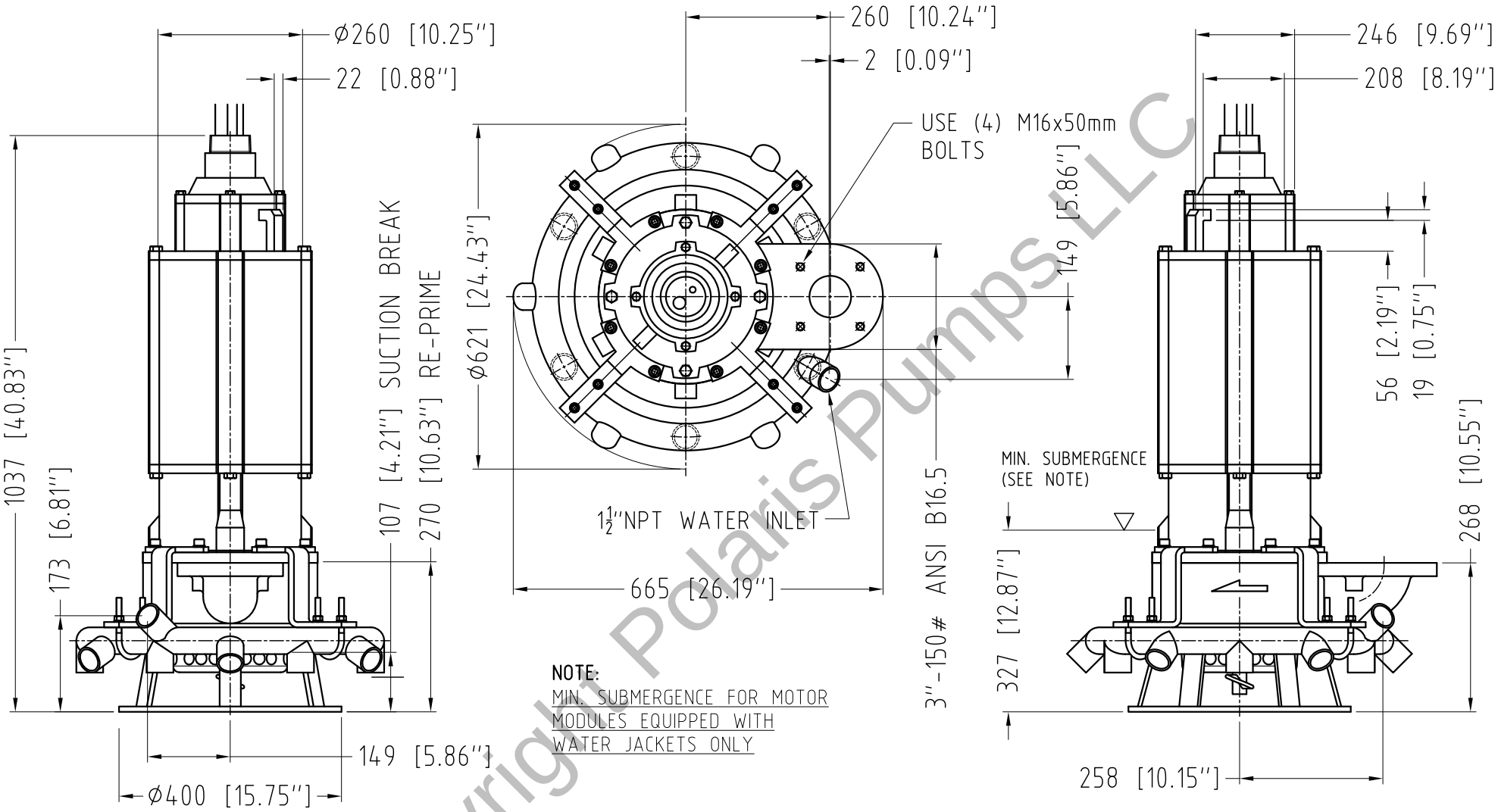

NOTE:
MIN. SUBMERGENCE FOR MOTOR MODULES EQUIPPED WITH WATER JACKETS ONLY

GENERAL ARRANGEMENT, WEIGHTS **TBM 75 LH-PHO, PBO, PVO (5 - 10 HP 4P ISS Motors)** **OPTIONAL WATER JET RING**	
DRAWING NBR.: **A0651**	REV.: **0**
EFFECTIVE DATE : **08/05/2012**	

POLARIS PUMPS

PUMP MODEL	WEIGHT (lbs.)	WEIGHT (kg)
TBM 75 LH - PHO	528	240
TBM 75 LH - PBO	530.2	241
TBM 75 LH - PVO	531.3	241.5

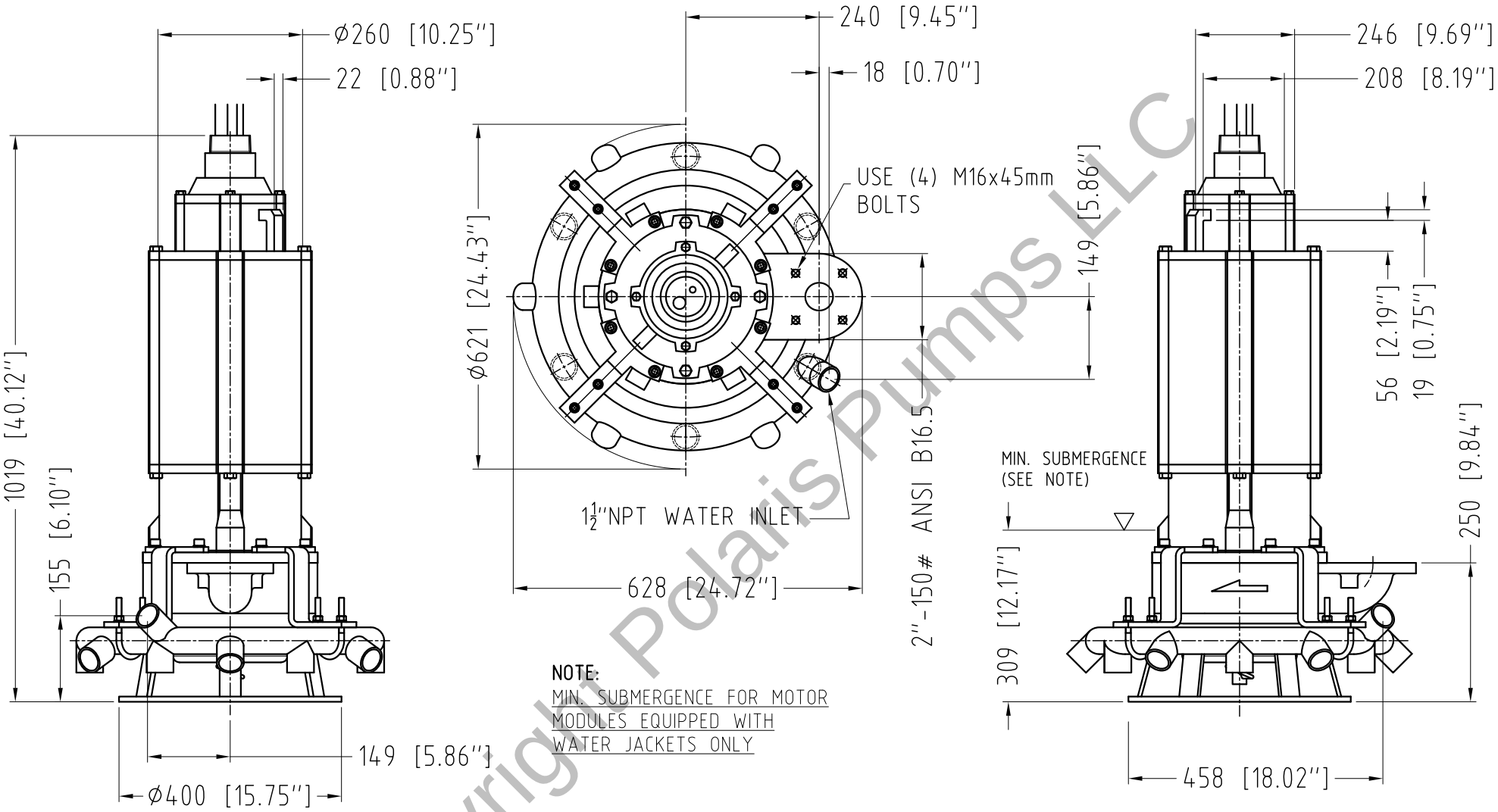

NOTE:
MIN. SUBMERGENCE FOR MOTOR MODULES EQUIPPED WITH WATER JACKETS ONLY

GENERAL ARRANGEMENT, WEIGHTS **TBM 50 LH-PHO, PBO, PVO (5 - 10HP 4P ISS Motors)** **OPTIONAL WATER JET RING**	
DRAWING NBR.: **A0647**	REV.: **0**
EFFECTIVE DATE : **08/05/2012**	

POLARIS PUMPS

PUMP MODEL	WEIGHT (lbs.)	WEIGHT (kg)
TBM 50 LH - PHO	506	230
TBM 50 LH - PBO	508	231
TBM 50 LH - PVO	511	232

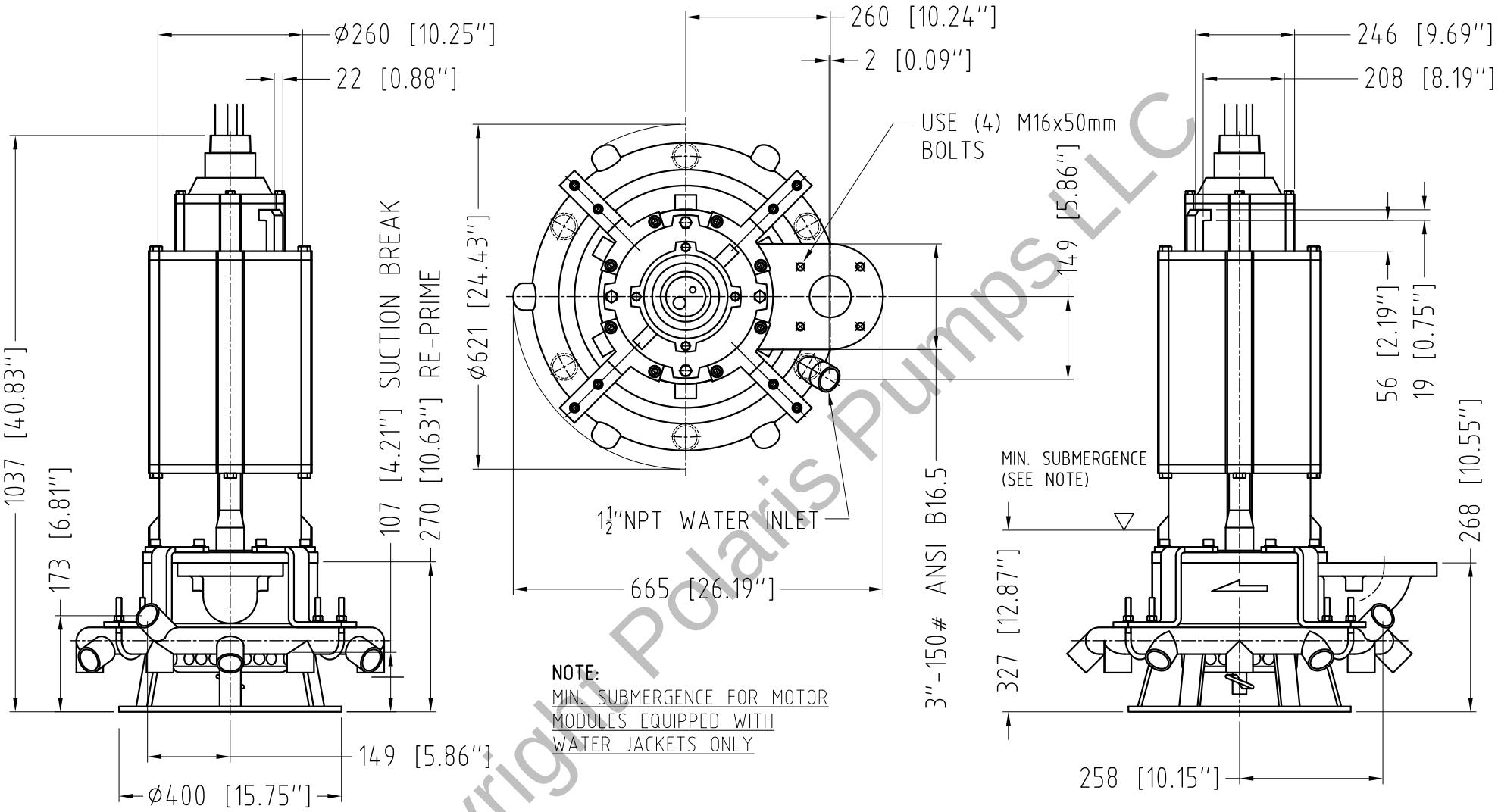

NOTE:
MIN. SUBMERGENCE FOR MOTOR MODULES EQUIPPED WITH WATER JACKETS ONLY

GENERAL ARRANGEMENT, WEIGHTS **TIP-MSP 3" TYPE O / A / C (5 - 10 HP 4P ISS Motors)** **OPTIONAL WATER JET RING**	
DRAWING NBR.: **A0651**	REV.: **0**
EFFECTIVE DATE : **08/05/2012**	

PUMP MODEL	WEIGHT (lbs.)	WEIGHT (kg)
MSP 3" TYPE O	528	240
MSP 3" TYPE A	530.2	241
MSP 3" TYPE C	531.3	241.5

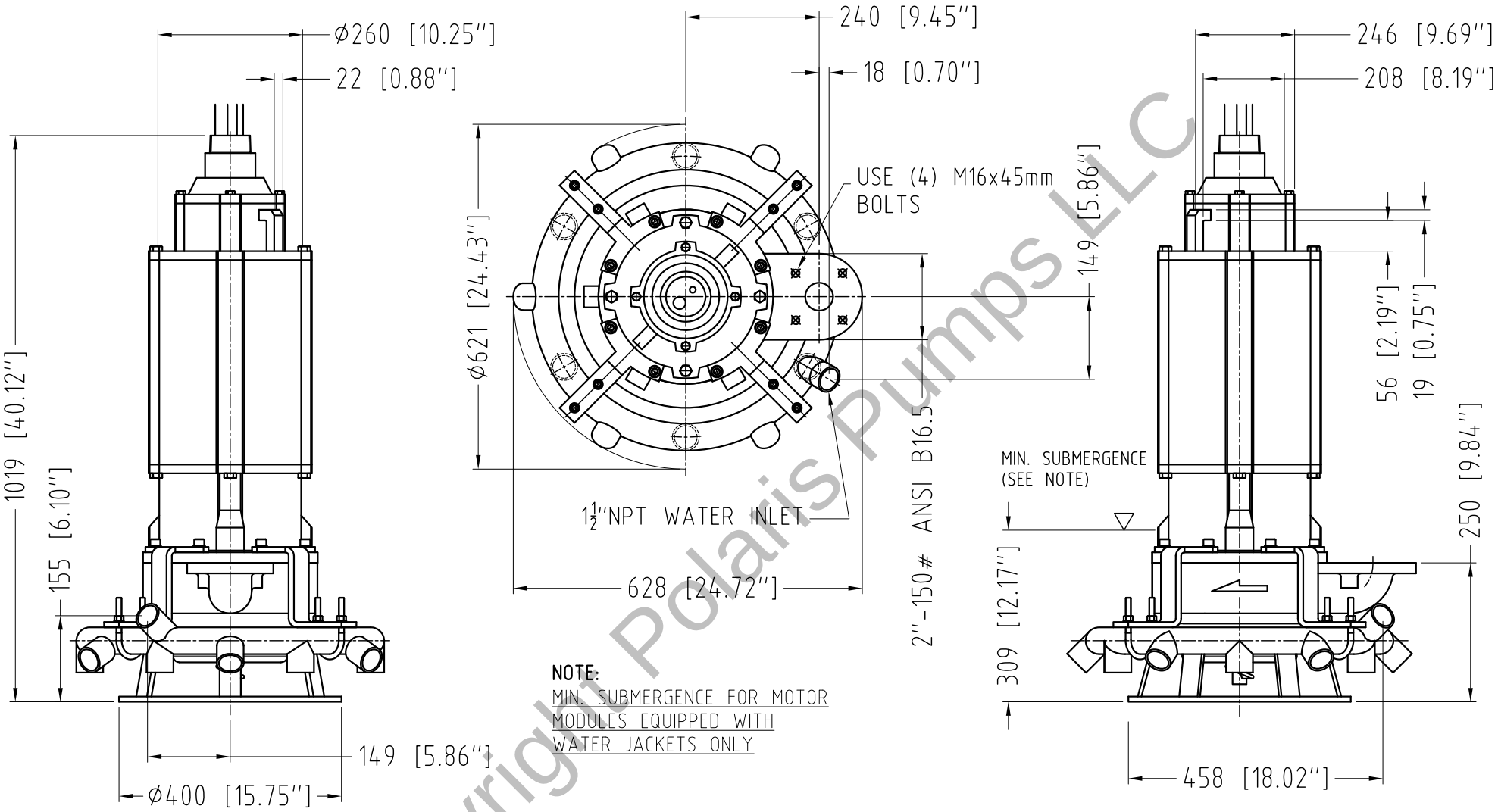

NOTE:
MIN. SUBMERGENCE FOR MOTOR MODULES EQUIPPED WITH WATER JACKETS ONLY

GENERAL ARRANGEMENT, WEIGHTS **TIP-MSP 2" TYPE O / A / C (5 - 10HP 4P ISS MOTOR)** **OPTIONAL WATER JET RING**	
DRAWING NBR.: **A0647**	REV.: **0**
EFFECTIVE DATE : **08/05/2012**	

PUMP MODEL	WEIGHT (lbs.)	WEIGHT (kg)
MSP 2" TYPE O	506	230
MSP 2" TYPE A	508	231
MSP 2" TYP C	511	232

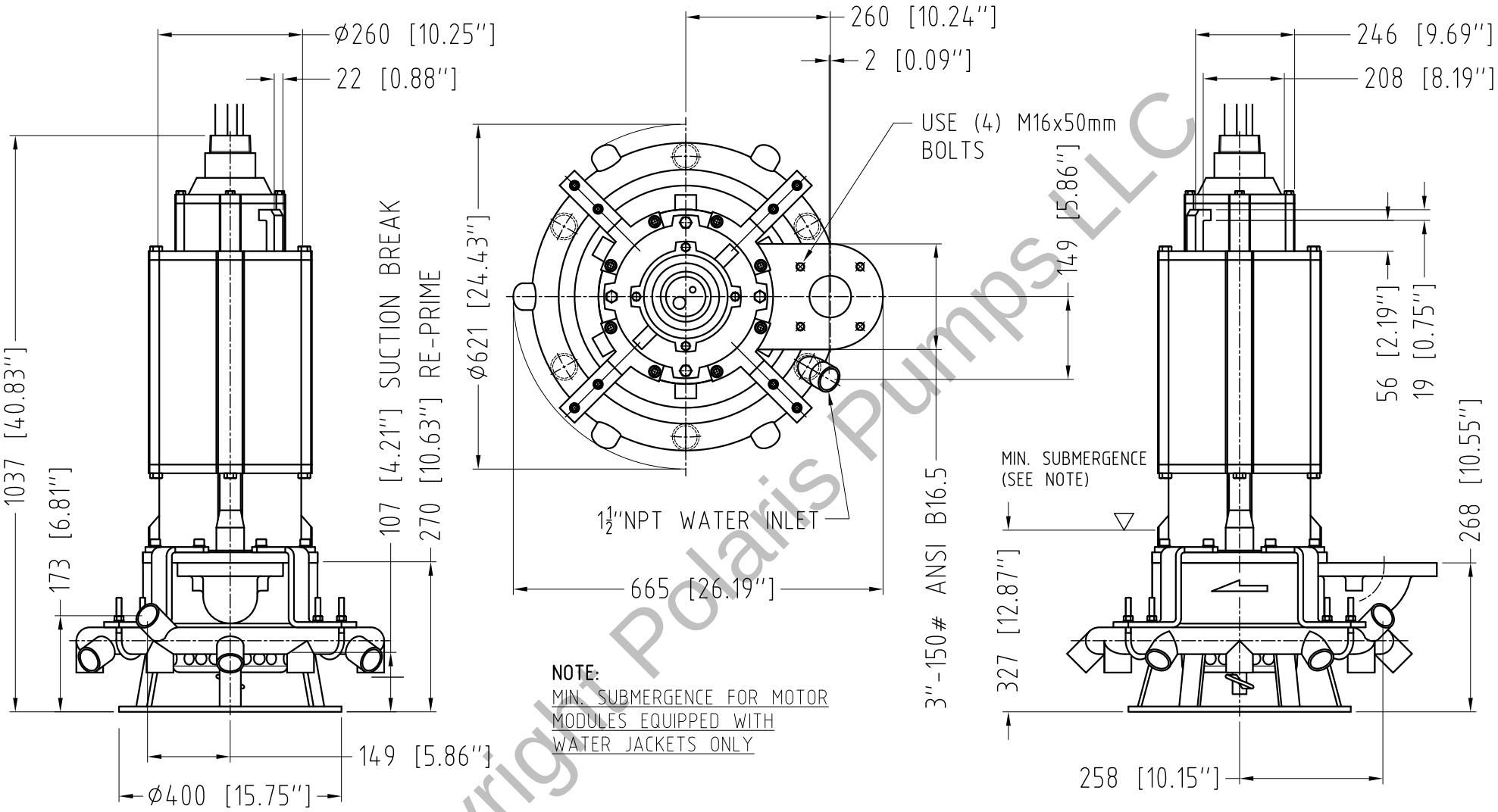

NOTE:
MIN. SUBMERGENCE FOR MOTOR MODULES EQUIPPED WITH WATER JACKETS ONLY

GENERAL ARRANGEMENT, WEIGHTS **TBM 75 LH-PHO, PBO, PVO (10 - 20 HP 4P Motors)** **OPTIONAL WATER JET RING**	
DRAWING NBR.: **A0607**	REV.: **1**
EFFECTIVE DATE : **08/05/2012**	

POLARIS PUMPS

PUMP MODEL	WEIGHT (lbs.)	WEIGHT (kg)
TBM 75 LH - PHO	528	240
TBM 75 LH - PBO	530.2	241
TBM 75 LH - PVO	531.3	241.5

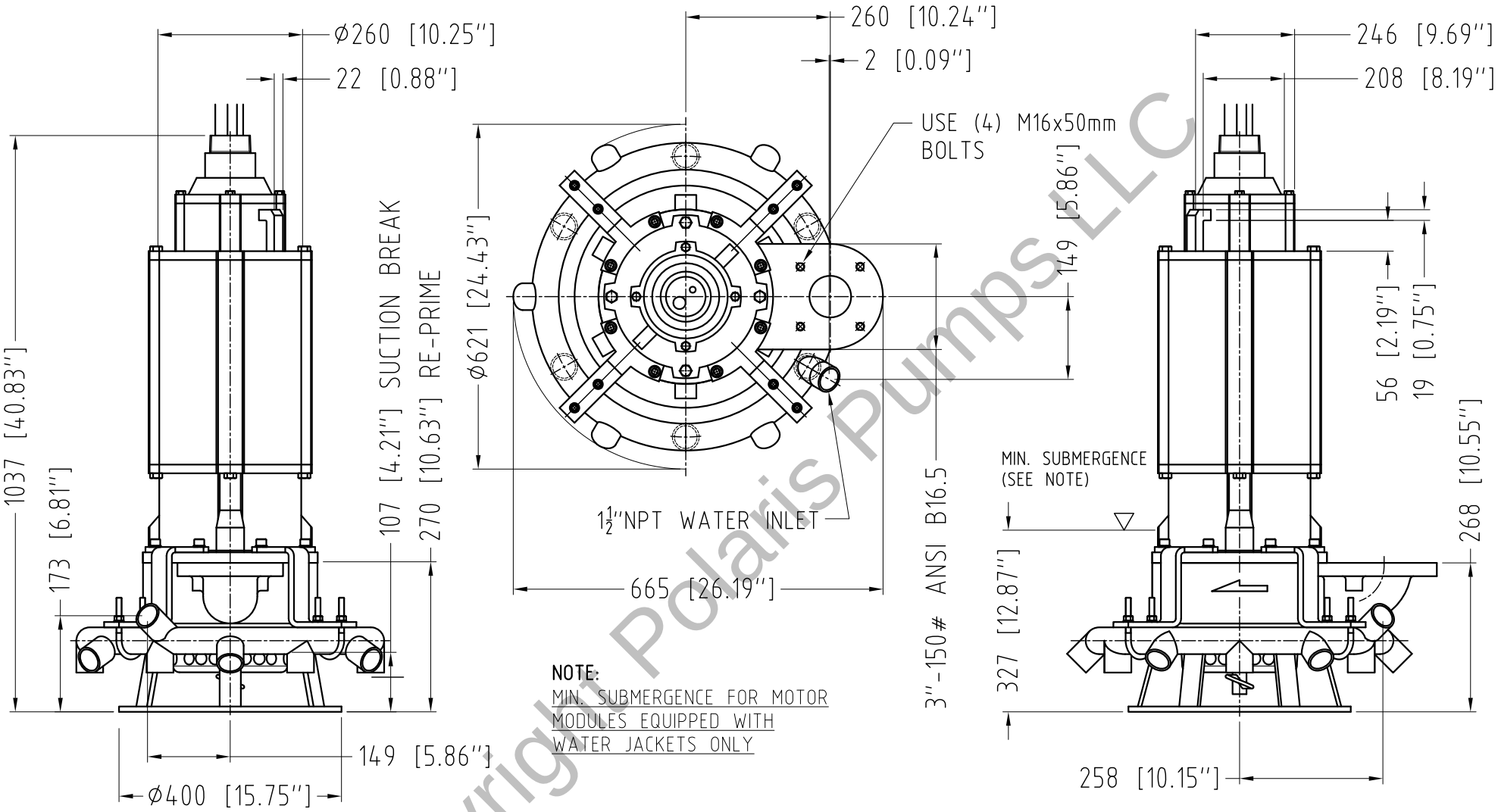

NOTE:
MIN. SUBMERGENCE FOR MOTOR MODULES EQUIPPED WITH WATER JACKETS ONLY

GENERAL ARRANGEMENT, WEIGHTS **TIP-MSP 3" TYPE O / A / C (10 - 20 HP 4P Motors)** **OPTIONAL WATER JET RING**	
DRAWING NBR.: **A0607**	REV.: **1**
EFFECTIVE DATE : **08/05/2012**	

PUMP MODEL	WEIGHT (lbs.)	WEIGHT (kg)
MSP 3" TYPE O	528	240
MSP 3" TYPE A	530.2	241
MSP 3" TYPE C	531.3	241.5

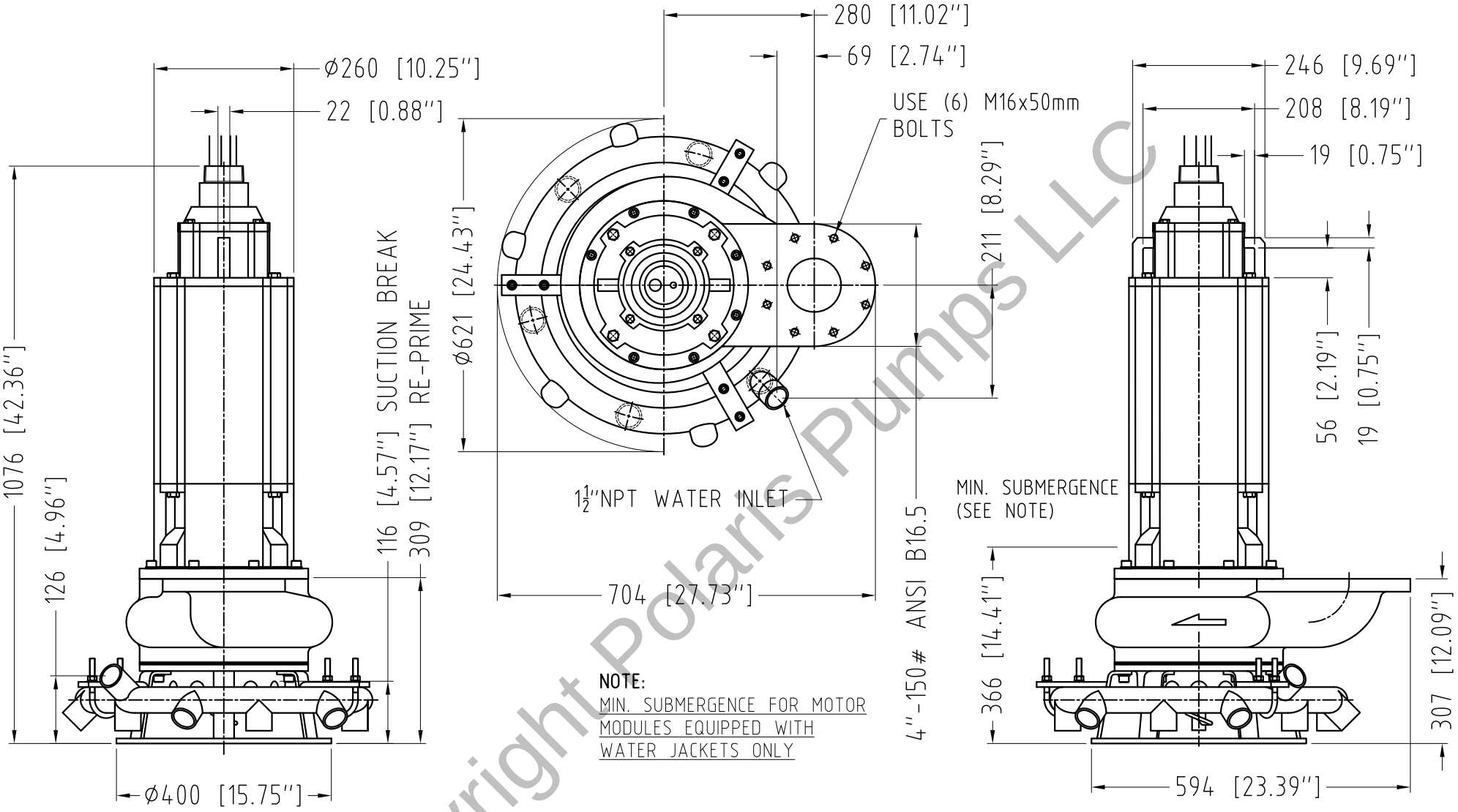

NOTE:
MIN. SUBMERGENCE FOR MOTOR MODULES EQUIPPED WITH WATER JACKETS ONLY

GENERAL ARRANGEMENT, WEIGHTS **TBM 100 LH-PHO, PBO, PVO (15 - 20 HP 4P Motors)** **OPTIONAL WATER JET RING**	
DRAWING NBR.: **A0629**	REV.: **0**
EFFECTIVE DATE : **08-09-2011**	

POLARIS PUMPS

PUMP MODEL	WEIGHT (lbs.)	WEIGHT (kg)
TBM 100 LH - PHO	558.8	254
TBM 100 LH - PBO	561	255
TBM 100 LH - PVO	562	255.5

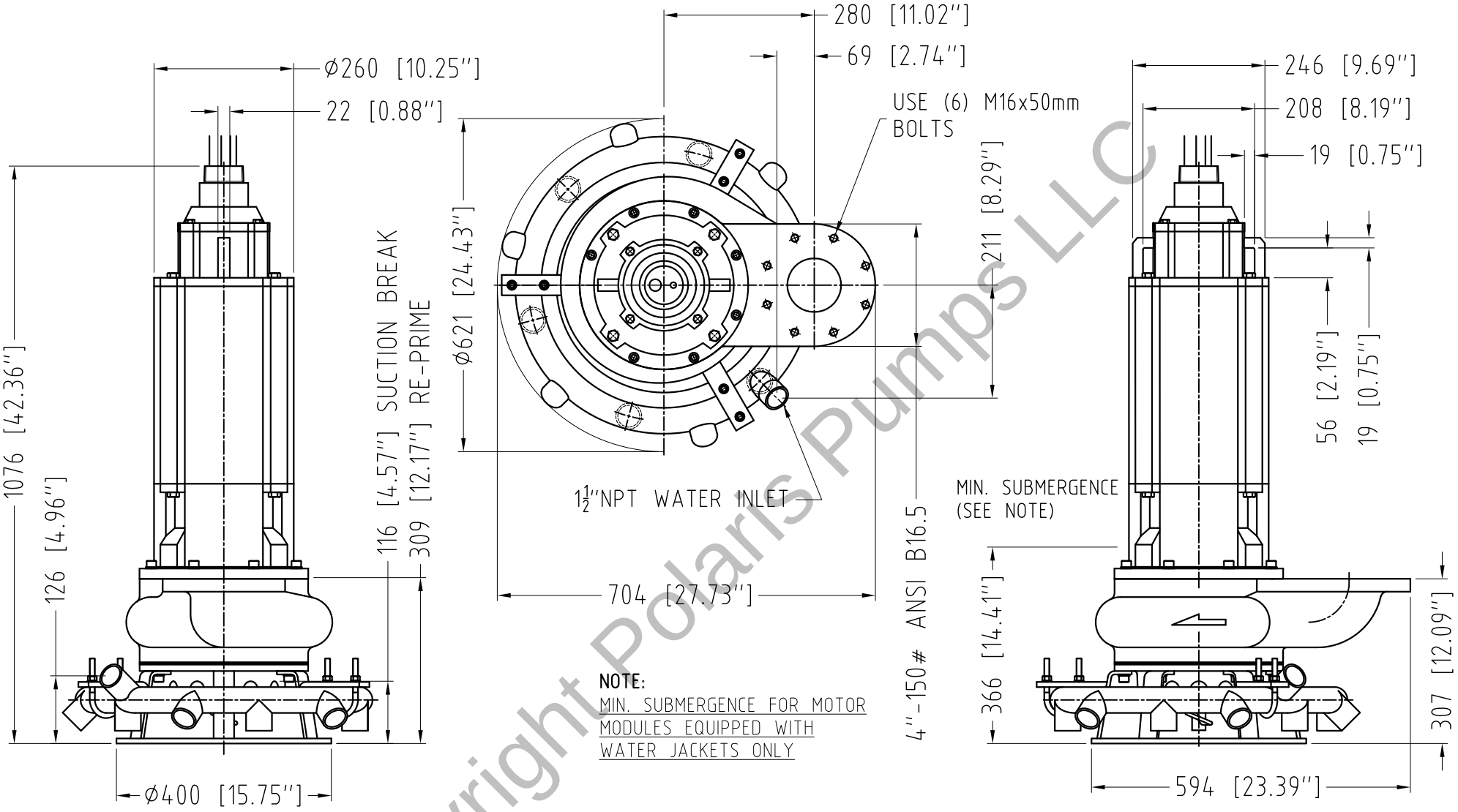

NOTE:
MIN. SUBMERGENCE FOR MOTOR MODULES EQUIPPED WITH WATER JACKETS ONLY

GENERAL ARRANGEMENT, WEIGHTS **TIP-MSP 4" TYPE O / A / C (15 - 20 HP 4P Motors)** **OPTIONAL WATER JET RING**	
DRAWING NBR.: **A0629**	REV.: **0**
EFFECTIVE DATE : **08-09-2011**	

PUMP MODEL	WEIGHT (lbs.)	WEIGHT (kg)
MSP 4" TYPE O	558.8	254
MSP 4" TYPE A	561	255
MSP 4" TYPE C	562	255.5

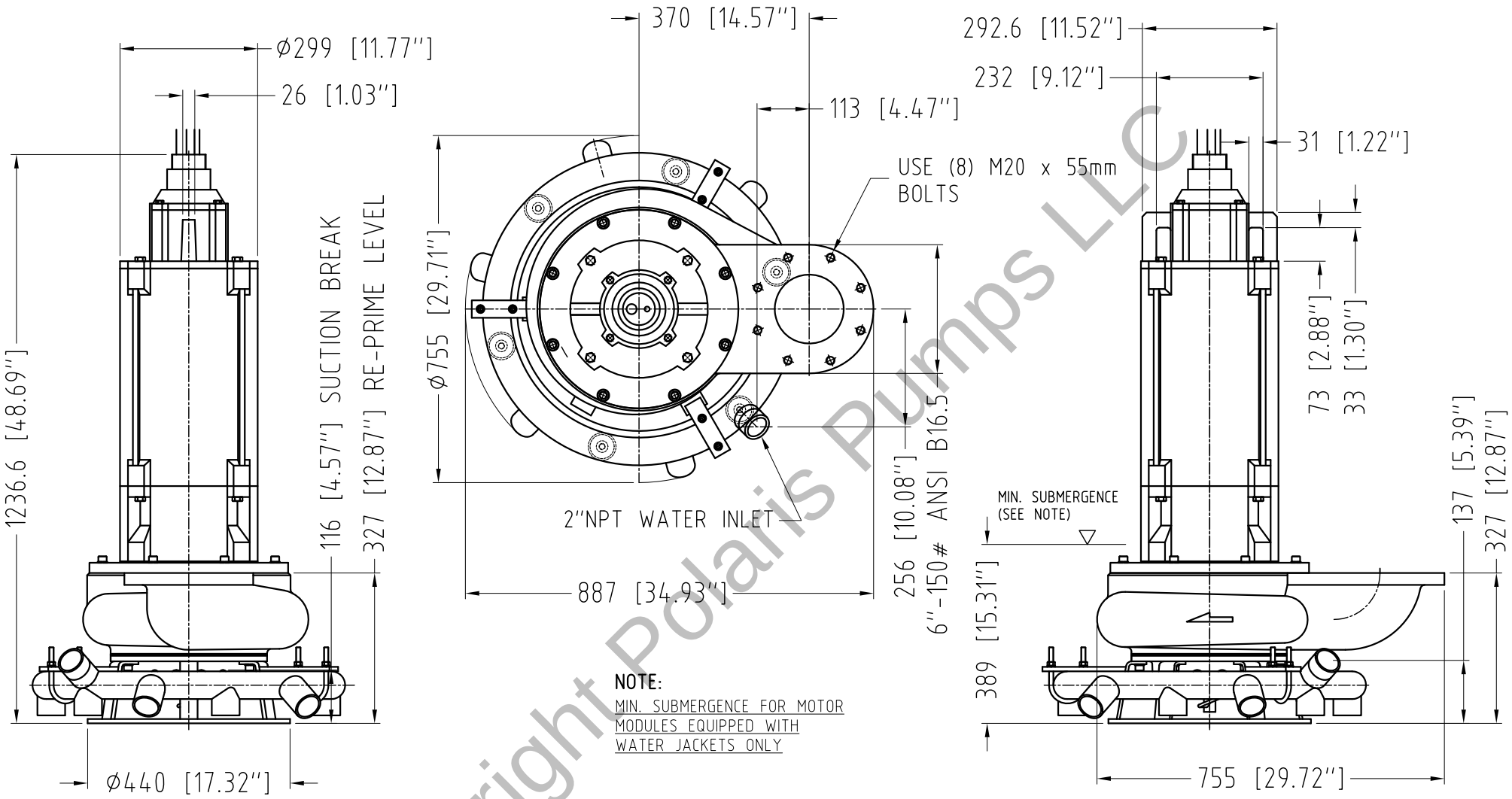

NOTE:
MIN. SUBMERGENCE FOR MOTOR MODULES EQUIPPED WITH WATER JACKETS ONLY

GENERAL ARRANGEMENT, WEIGHTS **TBM 150 LH-PHO, PBO, PVO (OPTIONAL WATER JET RING)** **(25-40HP 4P, 15-25 HP 6P Motors)**	
DRAWING NBR.: **A0645**	REV.: **0**
EFFECTIVE DATE : **08/05/2012**	

POLARIS PUMPS

PUMP MODEL	WEIGHT (lbs.)	WEIGHT (kg)
TBM 150 LH - PHO	1101	501
TBM 150 LH - PBO	1106	503
TBM 150 LH - PVO	1108	504

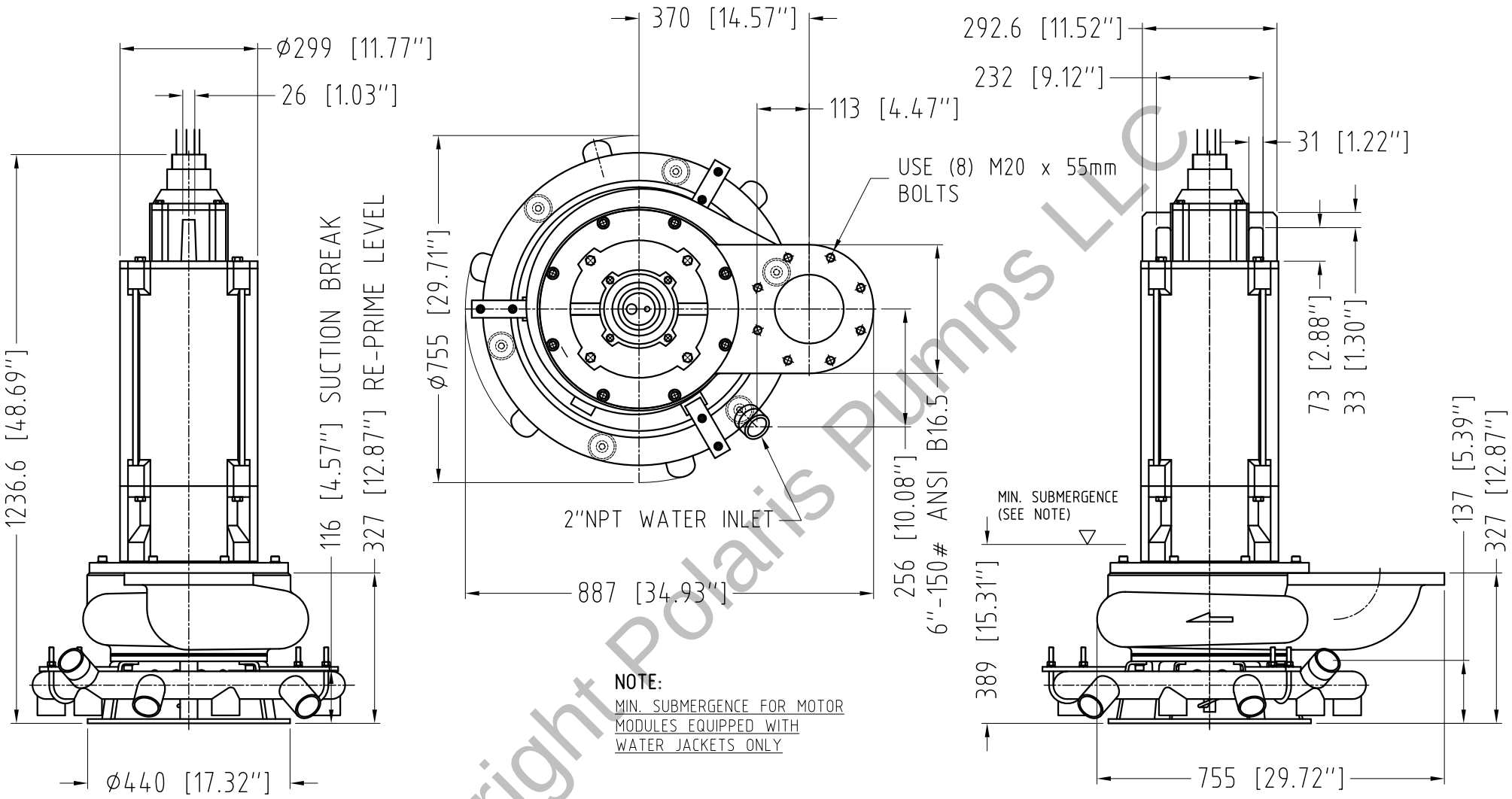

NOTE:
MIN. SUBMERGENCE FOR MOTOR MODULES EQUIPPED WITH WATER JACKETS ONLY

GENERAL ARRANGEMENT, WEIGHTS **TIP-MSP 6" TYPE O/A/C (OPTIONAL WATER JET RING)** **(25-40HP 4P, 15-25 HP 6P Motors)**	
DRAWING NBR.: **A0645**	REV.: **0**
EFFECTIVE DATE : **05/05/2012**	

PUMP MODEL	WEIGHT (lbs.)	WEIGHT (kg)
MSP 6" TYPE O	1101	501
MSP 6" TYPE A	1106	503
MSP 6" TYPE C	1108	504

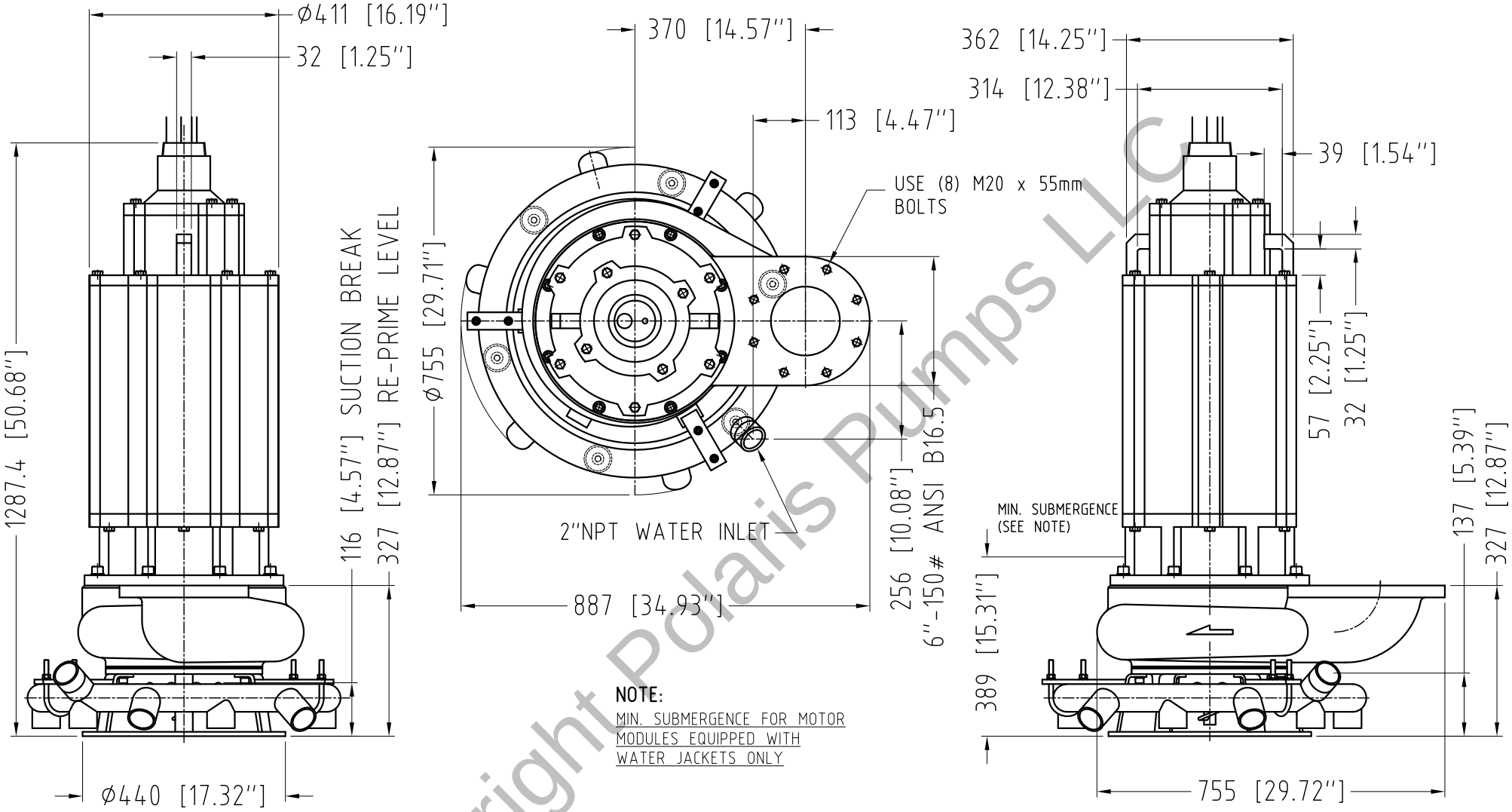

NOTE:
MIN. SUBMERGENCE FOR MOTOR MODULES EQUIPPED WITH WATER JACKETS ONLY

GENERAL ARRANGEMENT, WEIGHTS **TBM 150 LH-PHO, PBO, PVO (OPTIONAL WATER JET RING)** **(30-40HP 6P, 50-75HP 4P Motors)**	
DRAWING NBR.: **A0646**	REV.: **0**
EFFECTIVE DATE : **08/05/2012**	

POLARIS PUMPS

PUMP MODEL	WEIGHT (lbs.)	WEIGHT (kg)
TBM 150 LH - PHO	1503	683
TBM 150 LH - PBO	1506	684
TBM 150 LH - PVO	1507	685

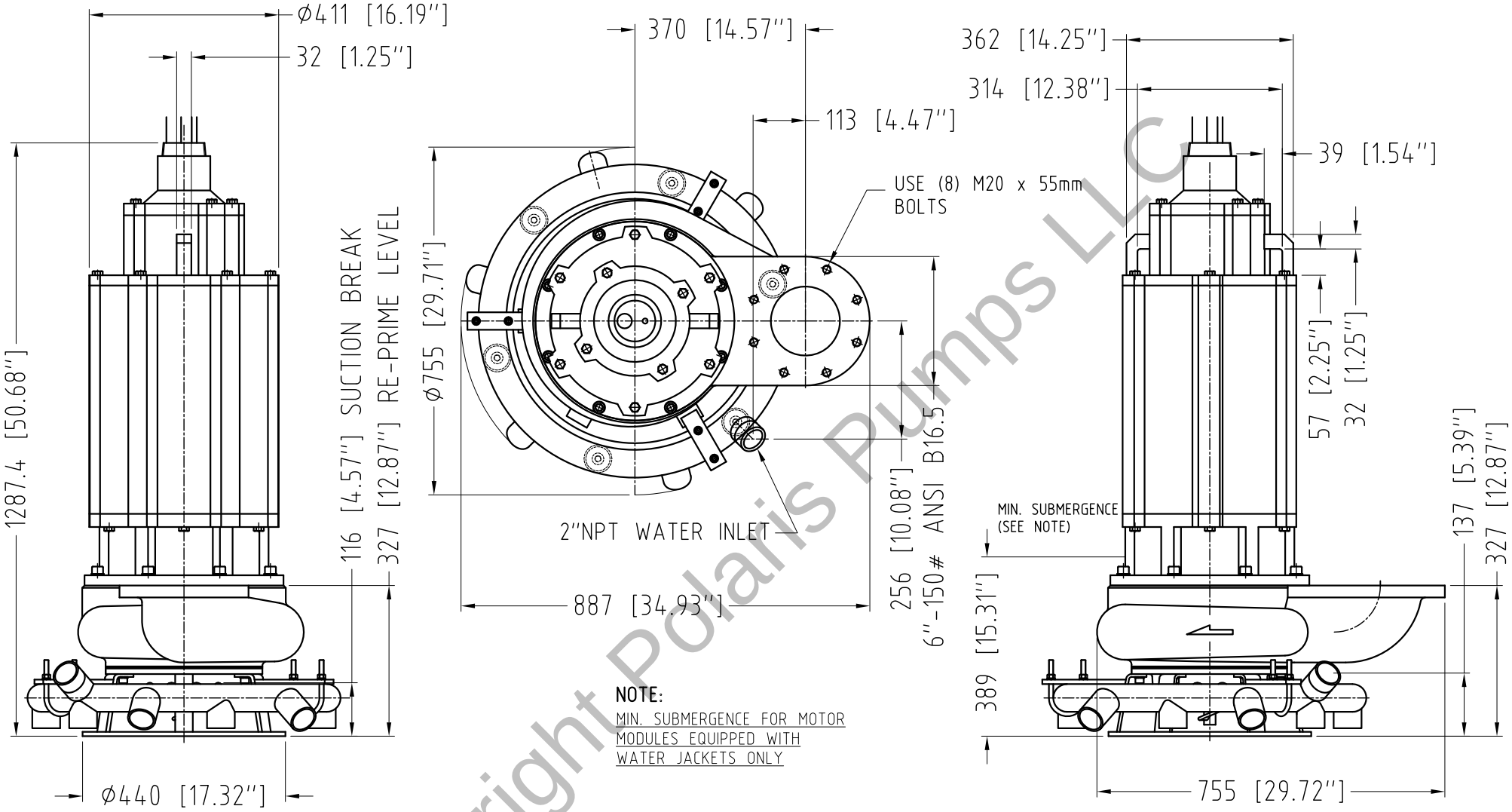

NOTE:
MIN. SUBMERGENCE FOR MOTOR MODULES EQUIPPED WITH WATER JACKETS ONLY

GENERAL ARRANGEMENT, WEIGHTS **TIP-MSP 6" TYPE O/A/C (OPTIONAL WATER JET RING)** **(30-40HP 6P, 50-75HP 4P Motors)**	
DRAWING NBR.: **A0646**	REV.: **0**
EFFECTIVE DATE : **08/05/2012**	

PUMP MODEL	WEIGHT (lbs.)	WEIGHT (kg)
MSP 6" TYPE O	1503	683
MSP 6" TYPE A	1506	684
MSP 6" TYPE C	1507	685

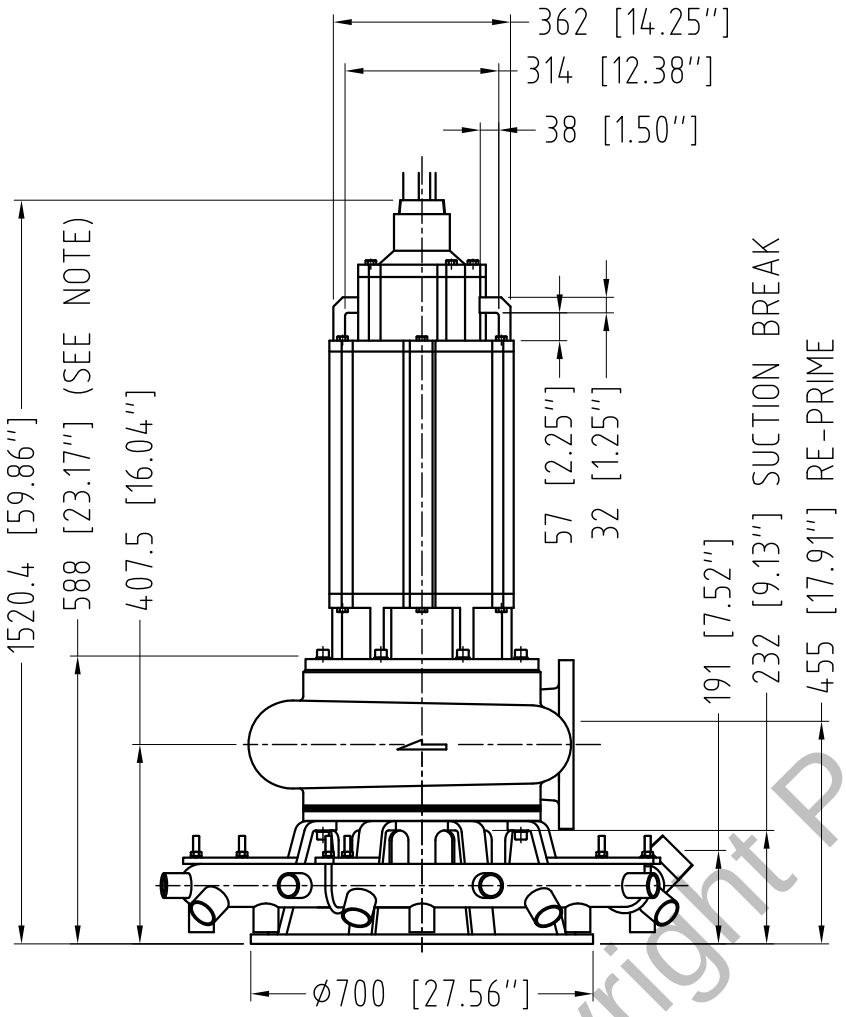

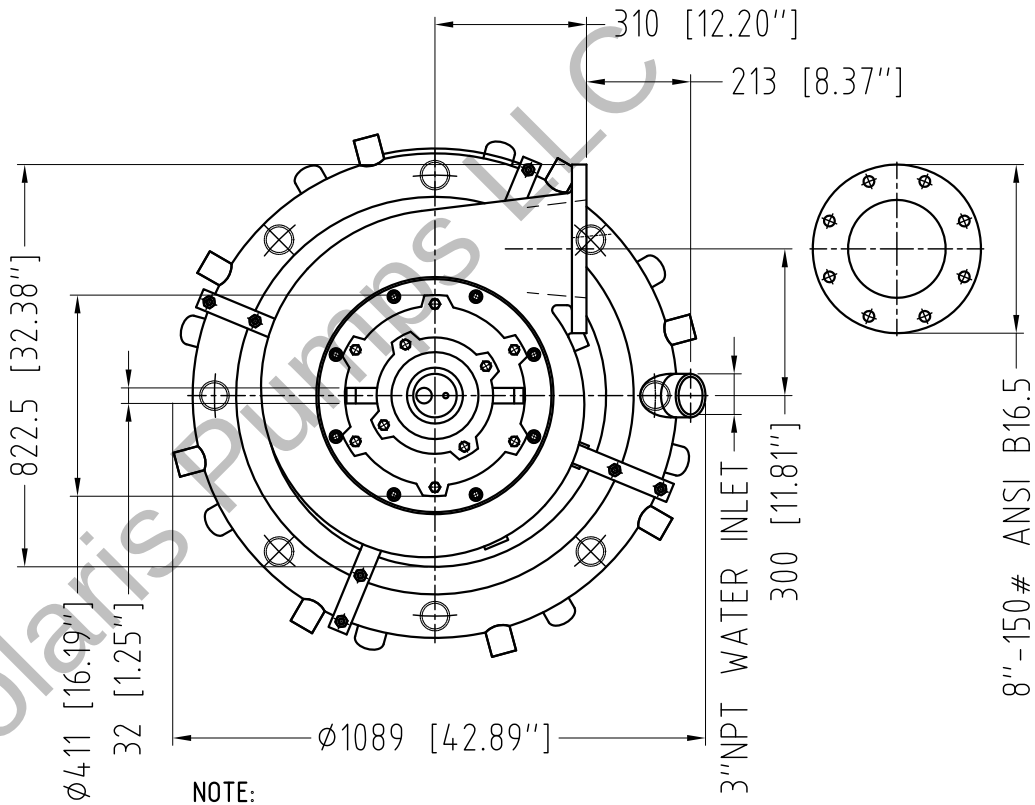

NOTE:
MIN. SUBMERGENCE FOR MOTOR MODULES EQUIPPED WITH WATER JACKETS ONLY

GENERAL ARRANGEMENT, WEIGHTS **TBM 200 LH-PHO, PBO, PVO (40 - 60 HP 6P Motors)** **OPTIONAL WATER JET RING (30 - 40 HP 8P Motors)**	
DRAWING NBR.: **A0646**	REV.: **0**
EFFECTIVE DATE : **08/05/2012**	

POLARIS PUMPS

PUMP MODEL	WEIGHT (lbs.)	WEIGHT (kg)
TBM 200 LH - PHO	2128	967
TBM 200 LH - PBO	2139	972
TBM 200 LH - PVO	2143	974

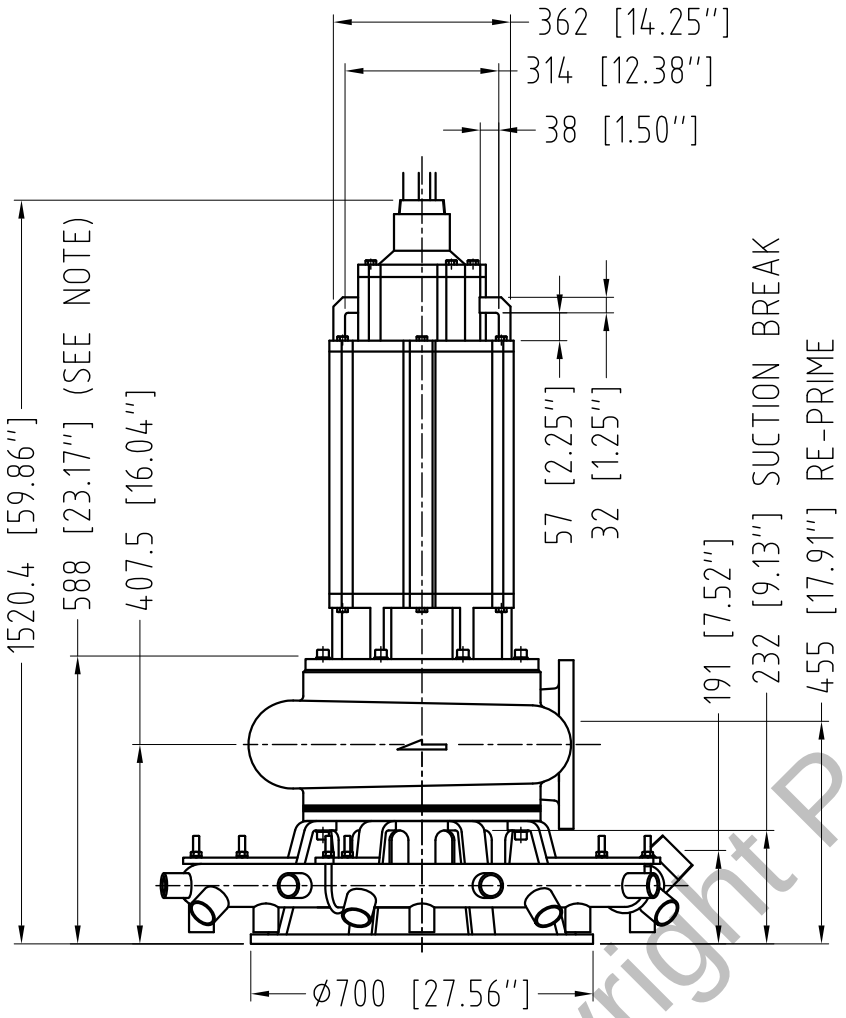

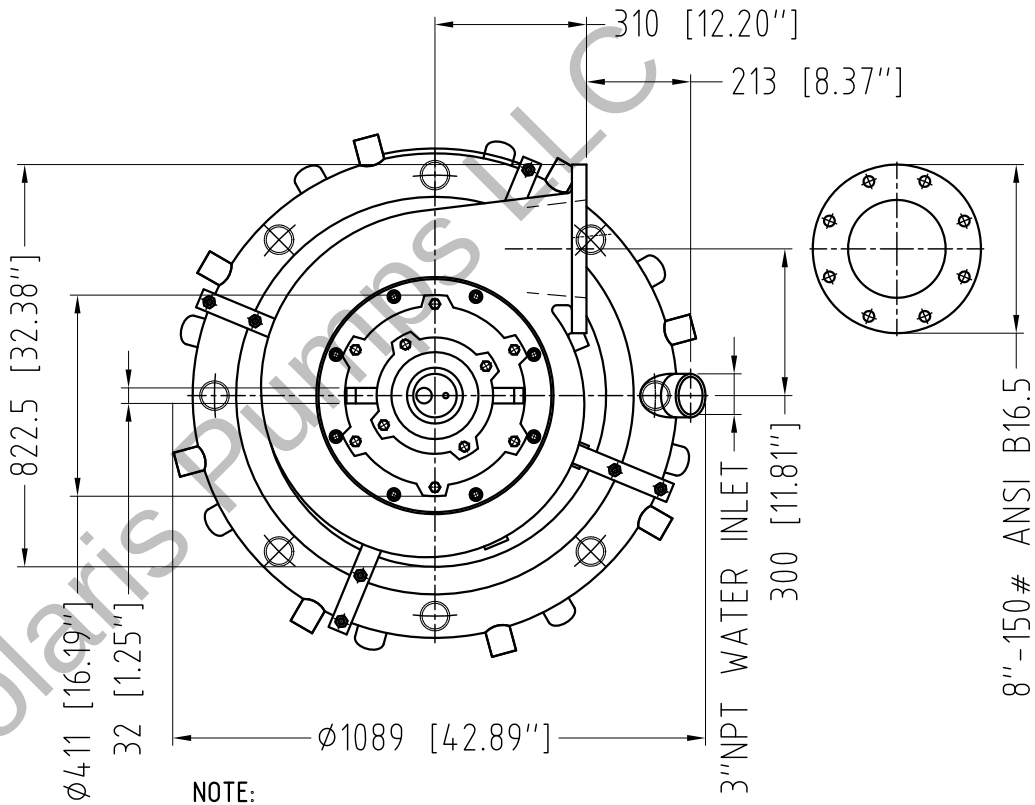

NOTE:
MIN. SUBMERGENCE FOR MOTOR MODULES EQUIPPED WITH WATER JACKETS ONLY

GENERAL ARRANGEMENT, WEIGHTS	
TIP-MSP 8" TYPE O / A / C (40 - 60 HP 6P Motors) OPTIONAL WATER JET RING (30 - 40 HP 8P Motors)	
DRAWING NBR.: A0646	REV.: 0
EFFECTIVE DATE : 08/12/2012	

PUMP MODEL	WEIGHT (lbs.)	WEIGHT (kg)
MSP 8" TYPE O	2128	967
MSP 8" TYPE A	2139	972
MSP 8" TYPE C	2143	974

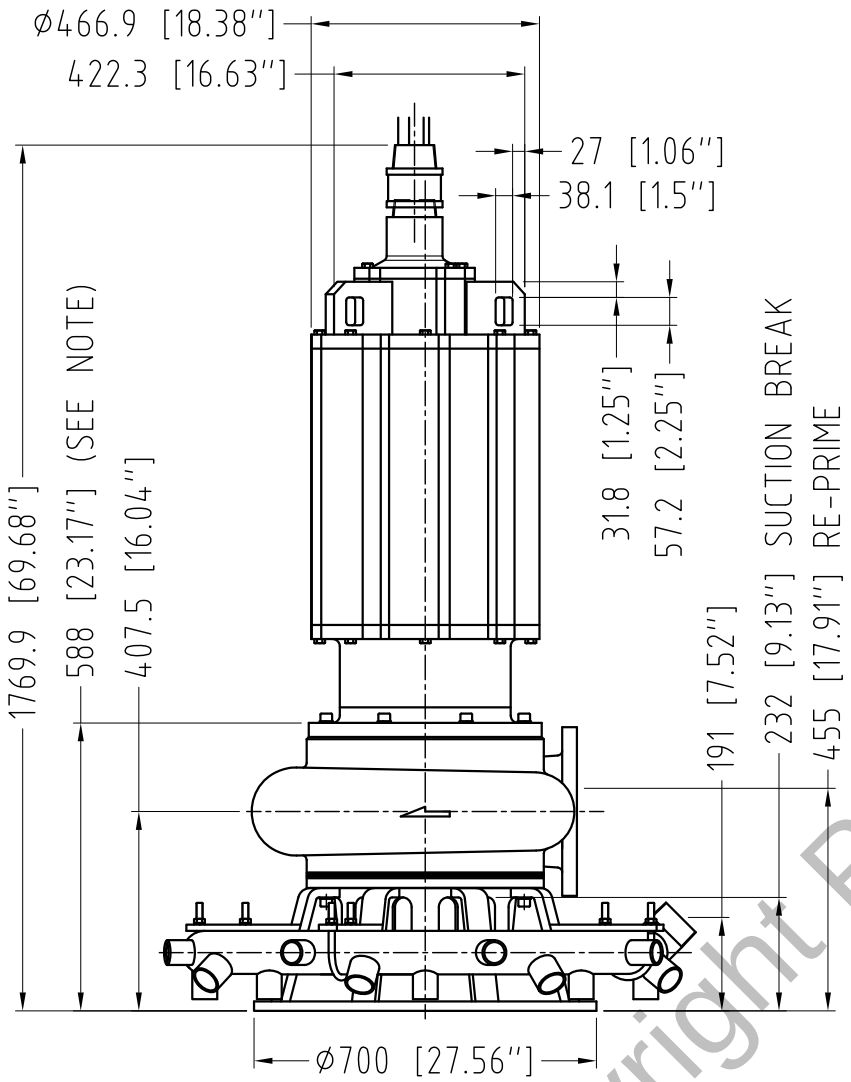

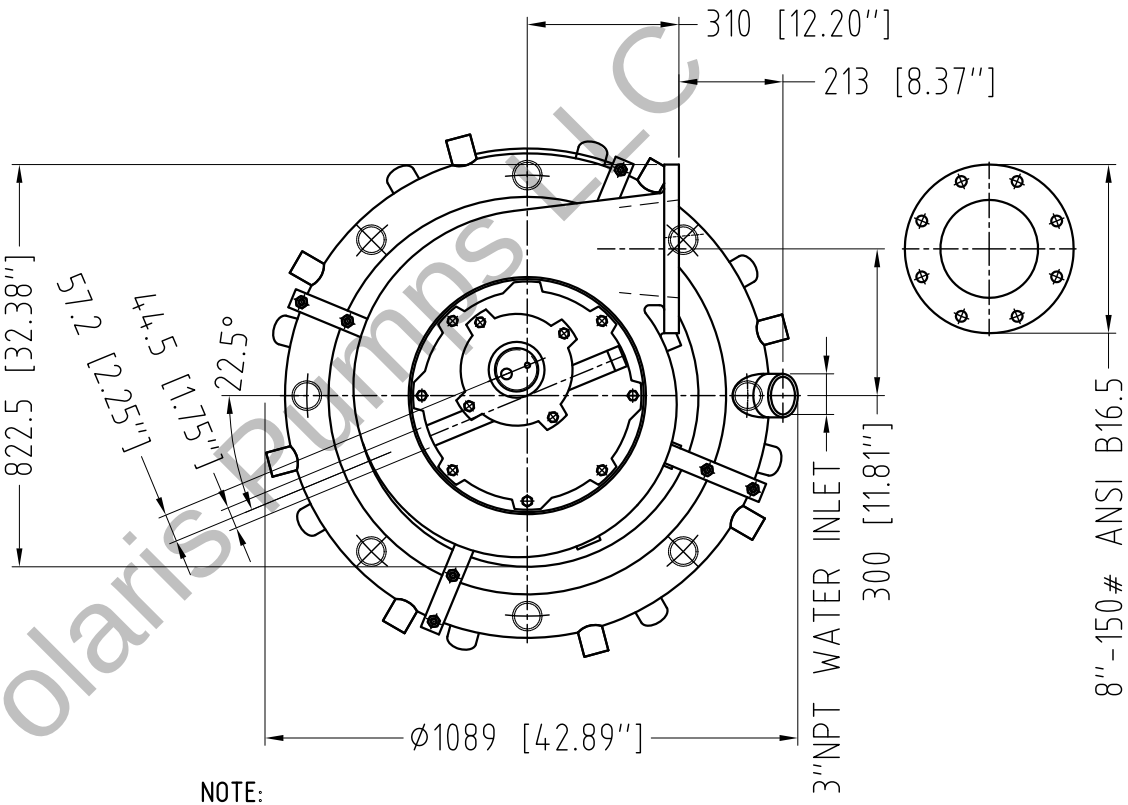

NOTE:
MIN. SUBMERGENCE FOR MOTOR MODULES EQUIPPED WITH WATER JACKETS ONLY

GENERAL ARRANGEMENT, WEIGHTS **TBM 200 LH-PHO, PBO, PVO (75 - 125 HP 6P Motors)** **OPTIONAL WATER JET RING (60 - 150 HP 8P Motors)**	
DRAWING NBR.: **A0645**	REV.: **0**
EFFECTIVE DATE : **08/12/2012**	

POLARIS PUMPS

PUMP MODEL	WEIGHT (lbs.)	WEIGHT (kg)
TBM 200 LH - PHO	2477	1126
TBM 200 LH - PBO	2488	1131
TBM 200 LH - PVO	2493	1133

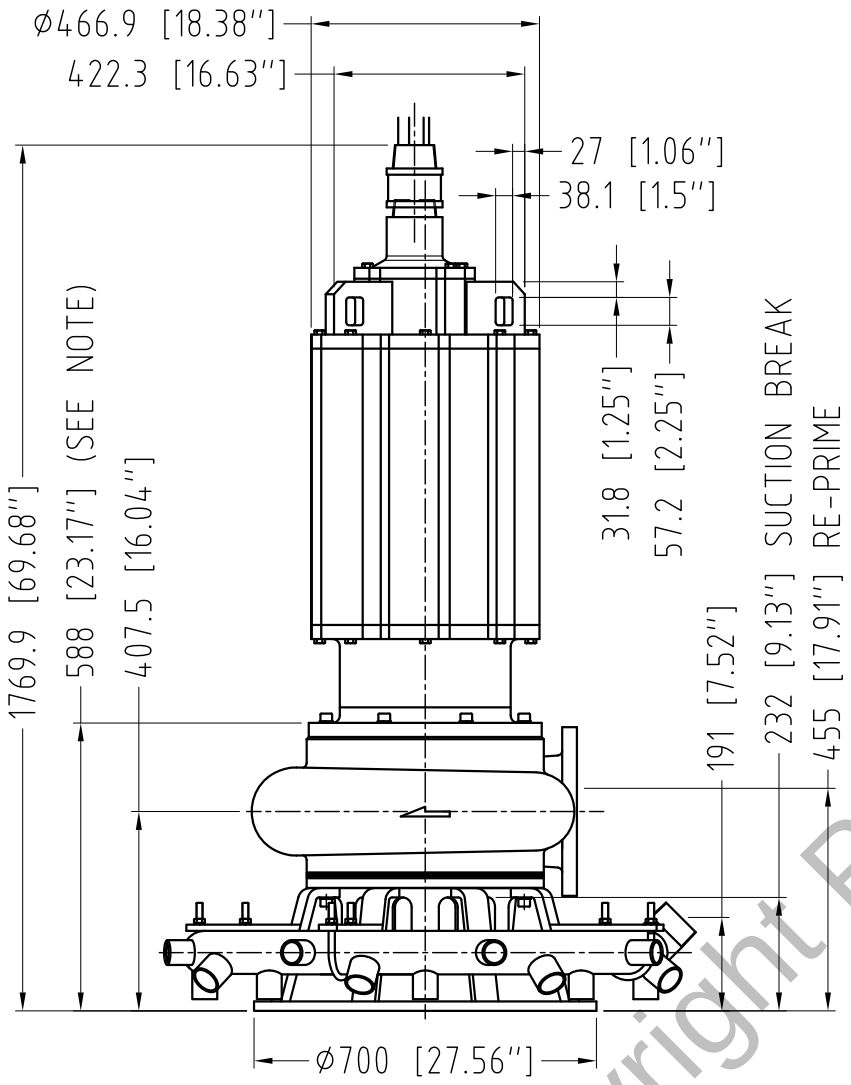

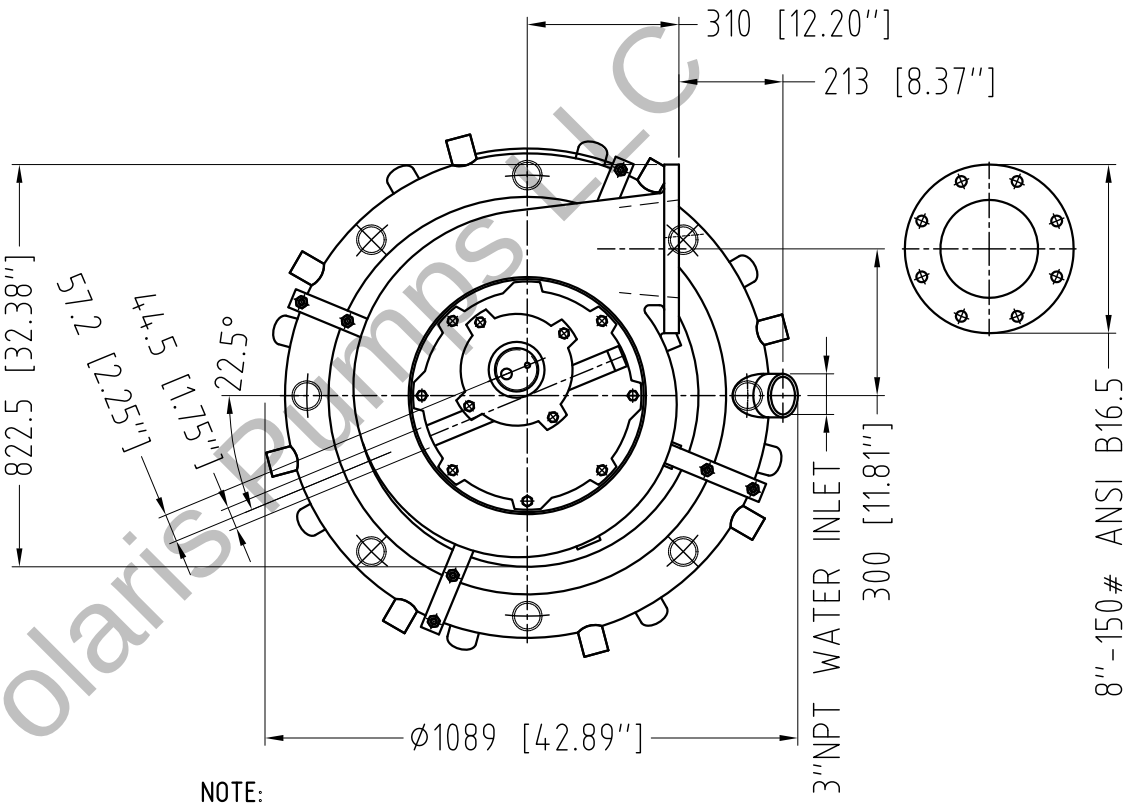

NOTE:
MIN. SUBMERGENCE FOR MOTOR MODULES EQUIPPED WITH WATER JACKETS ONLY

GENERAL ARRANGEMENT, WEIGHTS **TIP-MSP 8" TYPE O / A / C (75 - 125 HP 6P Motors)** **OPTIONAL WATER JET RING (60 - 150 HP 8P Motors)**	
DRAWING NBR.: **A0645**	REV.: **0**
EFFECTIVE DATE : **08/12/2012**	

PUMP MODEL	WEIGHT (lbs.)	WEIGHT (kg)
MSP 8" TYPE O	2477	1126
MSP 8" TYPE A	2488	1131
MSP 8" TYPE C	2493	1133

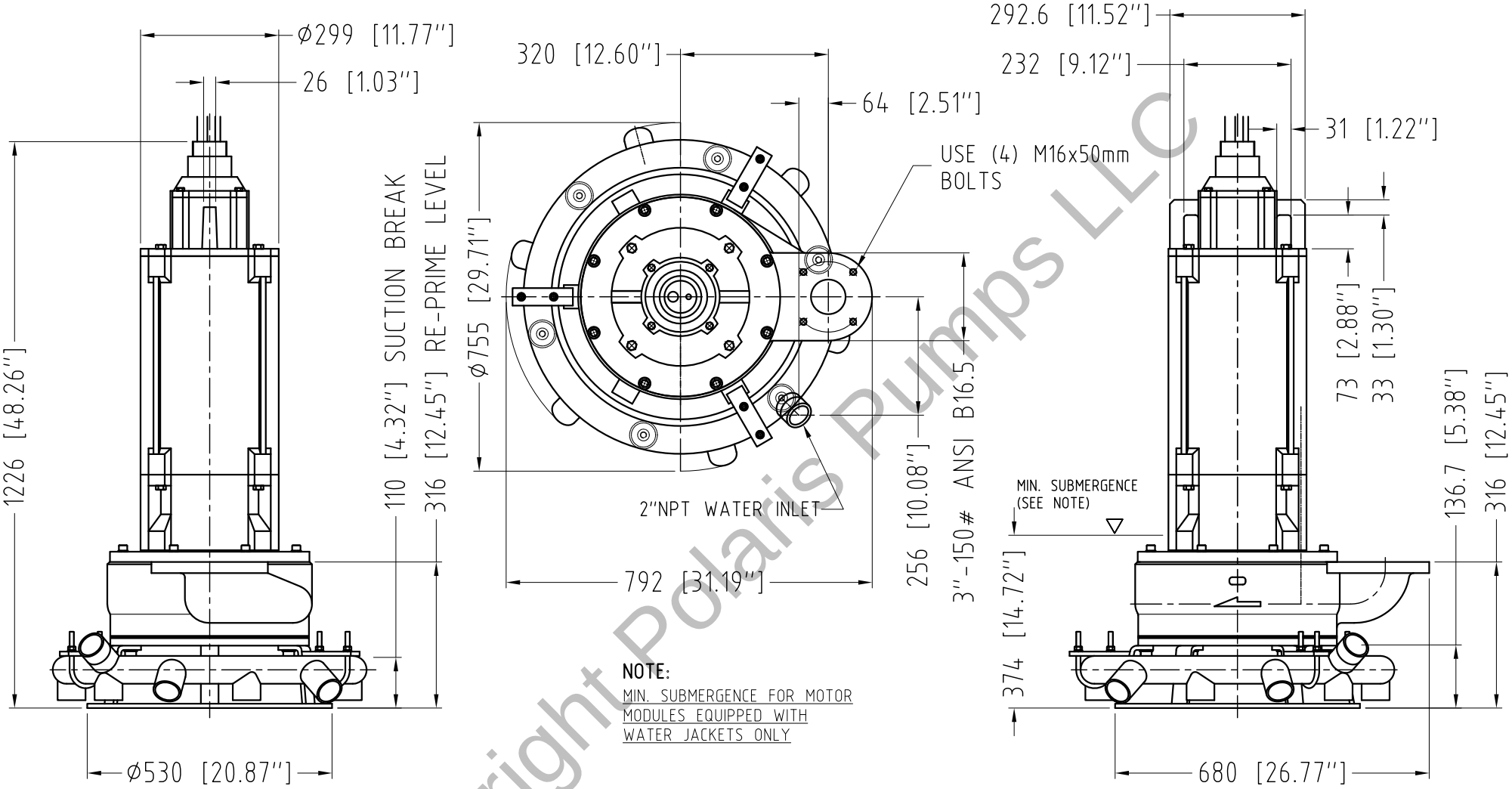

NOTE:
MIN. SUBMERGENCE FOR MOTOR MODULES EQUIPPED WITH WATER JACKETS ONLY

GENERAL ARRANGEMENT, WEIGHTS **TBM 75 MH-PHO, PBO, PVO - OPTIONAL JET WATER RING (15-25HP 6P, 25-40HP 4P Motors)**	
DRAWING NBR.: **A0635**	REV.: **0**
EFFECTIVE DATE : **11-17-2010**	

POLARIS PUMPS

PUMP MODEL	WEIGHT (lbs.)	WEIGHT (kg)
TBM 75 MH - PHO	788	358
TBM 75 MH - PBO	792	360
TBM 75 MH - PVO	794	361

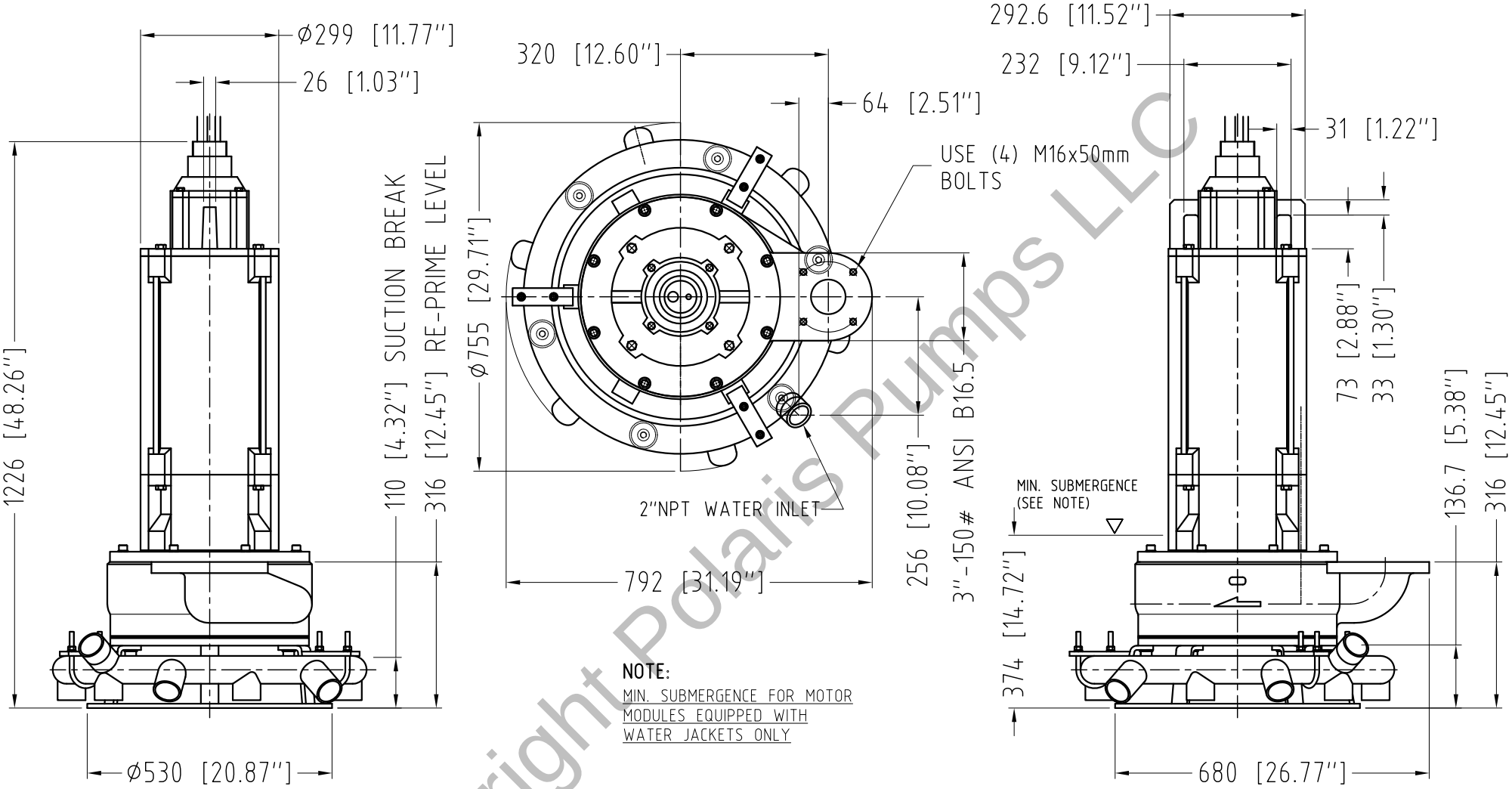

NOTE:
MIN. SUBMERGENCE FOR MOTOR MODULES EQUIPPED WITH WATER JACKETS ONLY

GENERAL ARRANGEMENT, WEIGHTS **TIP-MSP 3"MH TYPE 0 / A / C - OPTIONAL WATER JET RING (15-25HP 6P, 25-40HP 4P Motors)**	
DRAWING NBR.: **A0635**	REV.: **0**
EFFECTIVE DATE : **11-17-2010**	

PUMP MODEL	WEIGHT (lbs.)	WEIGHT (kg)
MSP 3"MH TYPE 0	788	358
MSP 3"MH TYPE A	792	360
MSP 3"MH TYPE C	794	361

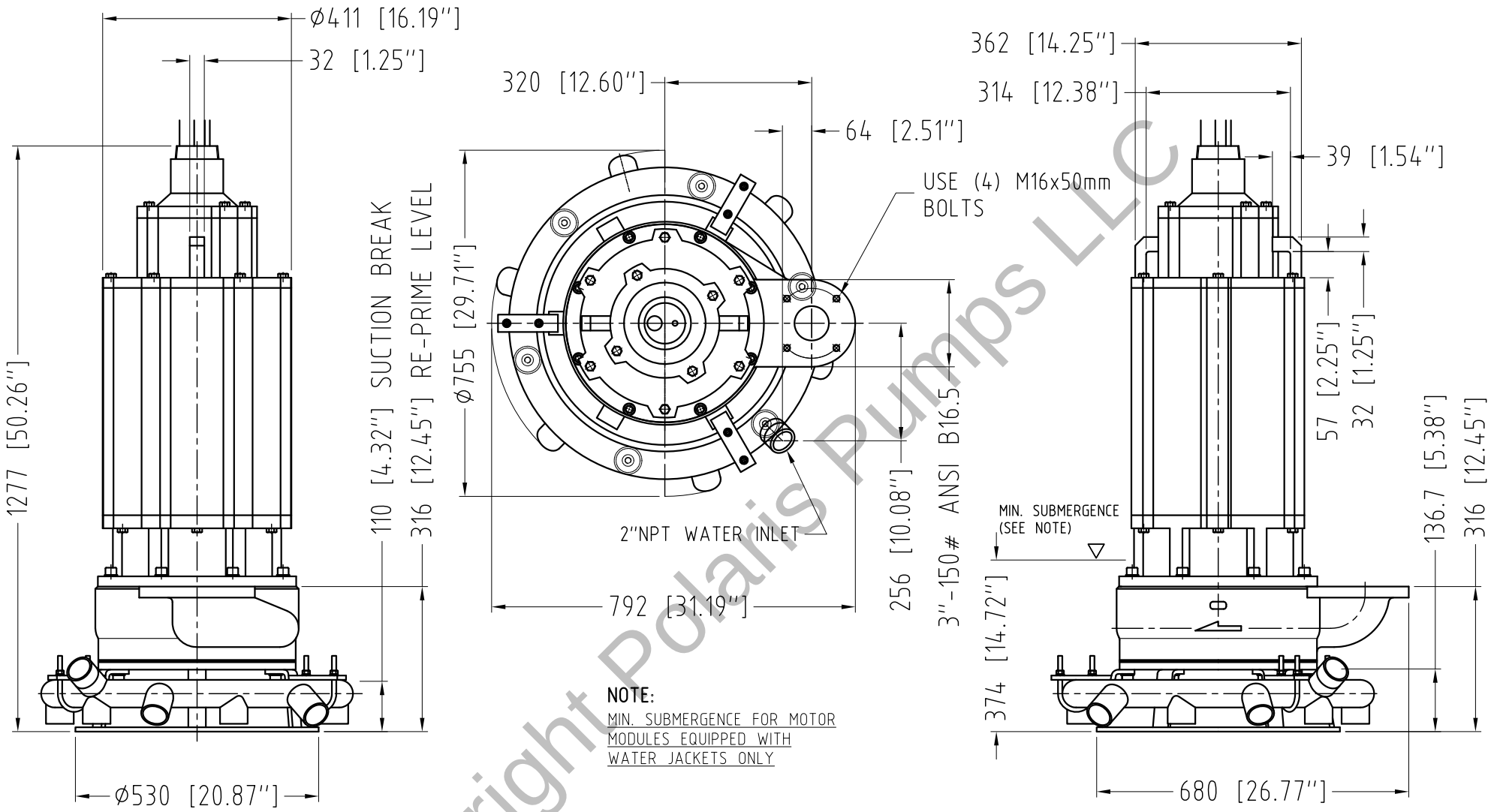

NOTE:
MIN. SUBMERGENCE FOR MOTOR MODULES EQUIPPED WITH WATER JACKETS ONLY

GENERAL ARRANGEMENT, WEIGHTS **TBM 75 MH-PHO, PBO, PVO (50 - 75 HP 4P Motors)**	
DRAWING NBR.: **A0648**	REV.: **0**
EFFECTIVE DATE : **08/05/2012**	

POLARIS PUMPS

PUMP MODEL	WEIGHT (lbs.)	WEIGHT (kg)
TBM 75 MH - PHO	1388	631
TBM 75 MH - PBO	1393	633
TBM 75 MH - PVO	1395	634

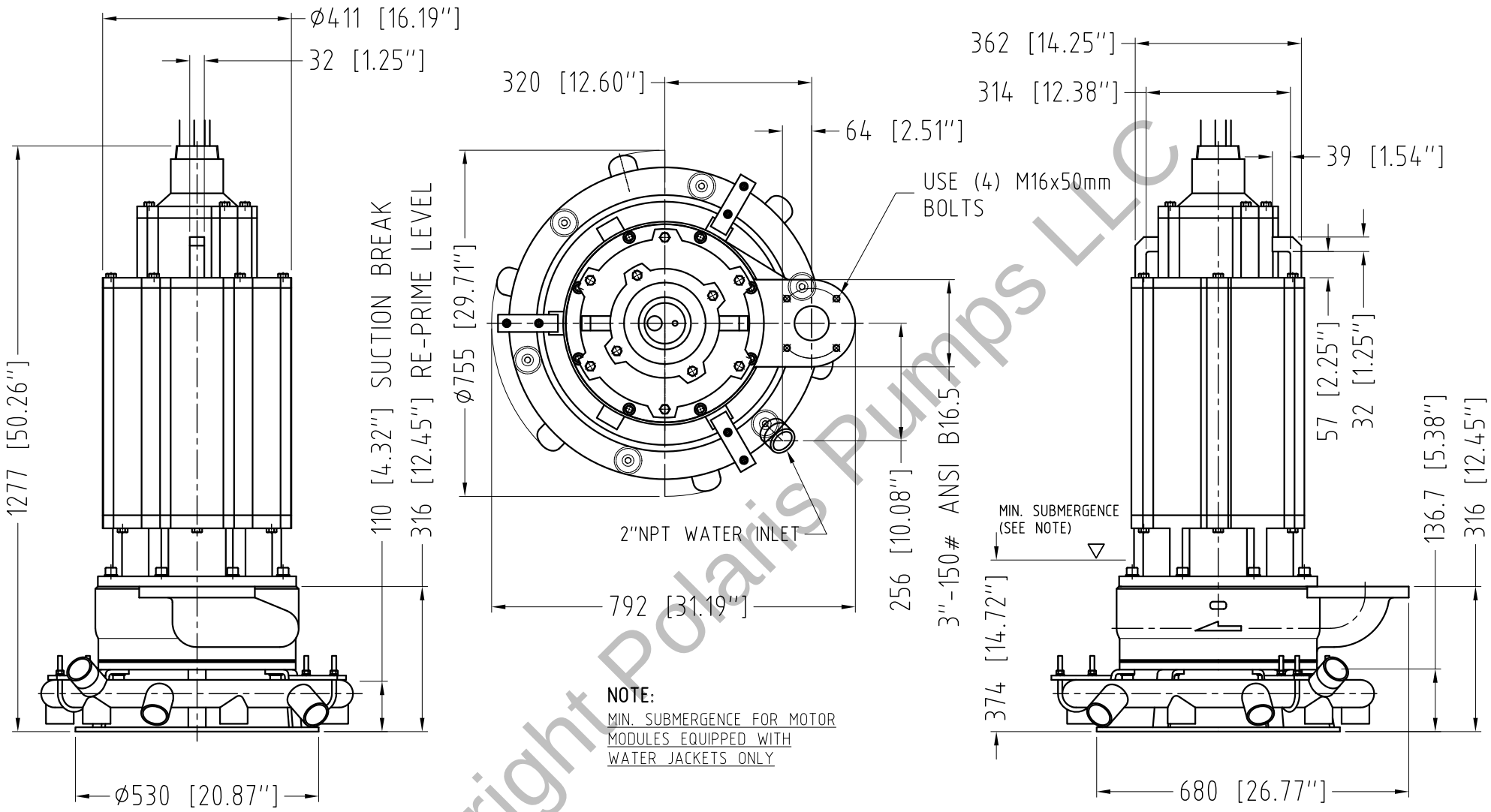

NOTE:
MIN. SUBMERGENCE FOR MOTOR MODULES EQUIPPED WITH WATER JACKETS ONLY

GENERAL ARRANGEMENT, WEIGHTS **TIP-MSP 3"MH TYPE 0 / A / C (50 - 75 HP 4P Motors)**	
DRAWING NBR.: **A0648**	REV.: **0**
EFFECTIVE DATE : **08/05/2012**	

PUMP MODEL	WEIGHT (lbs.)	WEIGHT (kg)
MSP 3"MH TYPE 0	1388	631
MSP 3"MH TYPE A	1393	633
MSP 3"MH TYPE C	1395	634

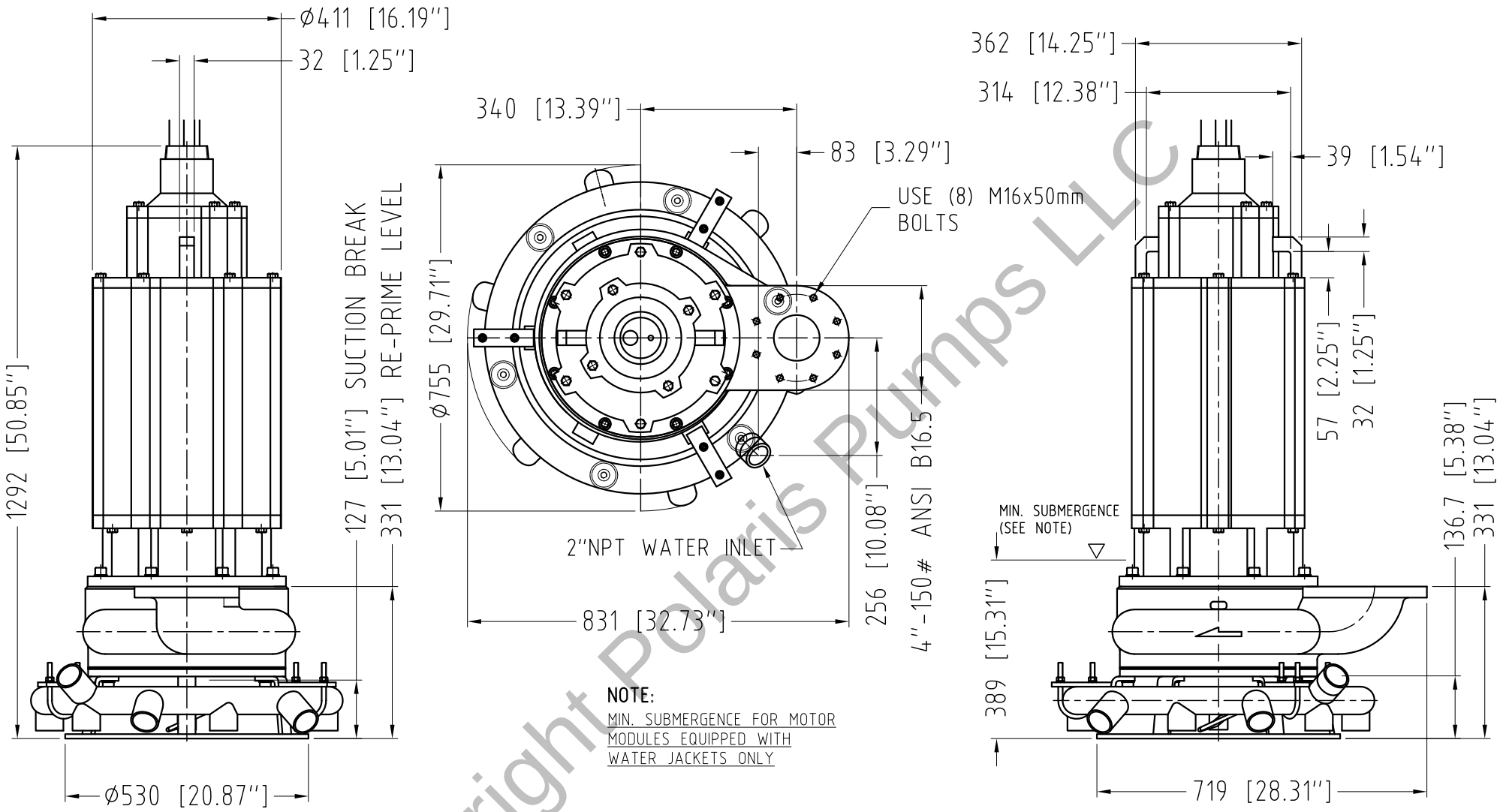

NOTE:
MIN. SUBMERGENCE FOR MOTOR MODULES EQUIPPED WITH WATER JACKETS ONLY

GENERAL ARRANGEMENT, WEIGHTS **TIP-MSP 4"MH TYPE 0 / A / C (50 - 75 HP 4P Motors)** **(30 - 40 HP 6P Motors)**	
DRAWING NBR.: **A0650**	REV.: **0**
EFFECTIVE DATE : **08/05/2012**	

PUMP MODEL	WEIGHT (lbs.)	WEIGHT (kg)
MSP 4"MH TYPE 0	1529	695
MSP 4"MH TYPE A	1538	699
MSP 4"MH TYPE C	1536	698

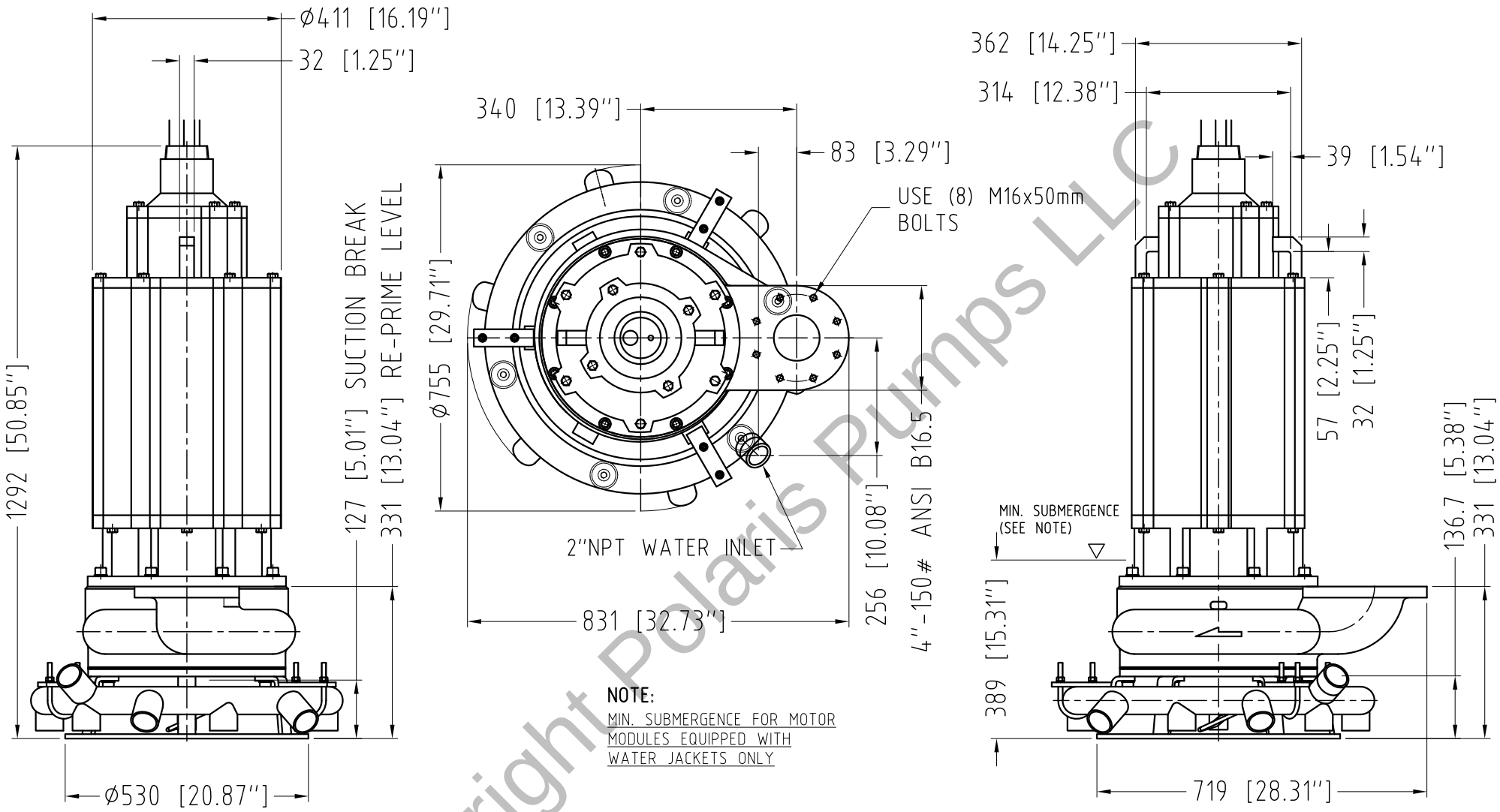

NOTE:
MIN. SUBMERGENCE FOR MOTOR MODULES EQUIPPED WITH WATER JACKETS ONLY

GENERAL ARRANGEMENT, WEIGHTS **TBM 100 MH-PHO, PBO, PVO (50 - 75 HP 4P Motors)** **(30 - 40 HP 6P Motors)**	
DRAWING NBR.: **A0650**	REV.: **0**
EFFECTIVE DATE : **08/05/2012**	

POLARIS PUMPS

PUMP MODEL	WEIGHT (lbs.)	WEIGHT (kg)
TBM 100 MH - PHO	1529	695
TBM 100 MH - PBO	1538	699
TBM 100 MH - PVO	1536	698

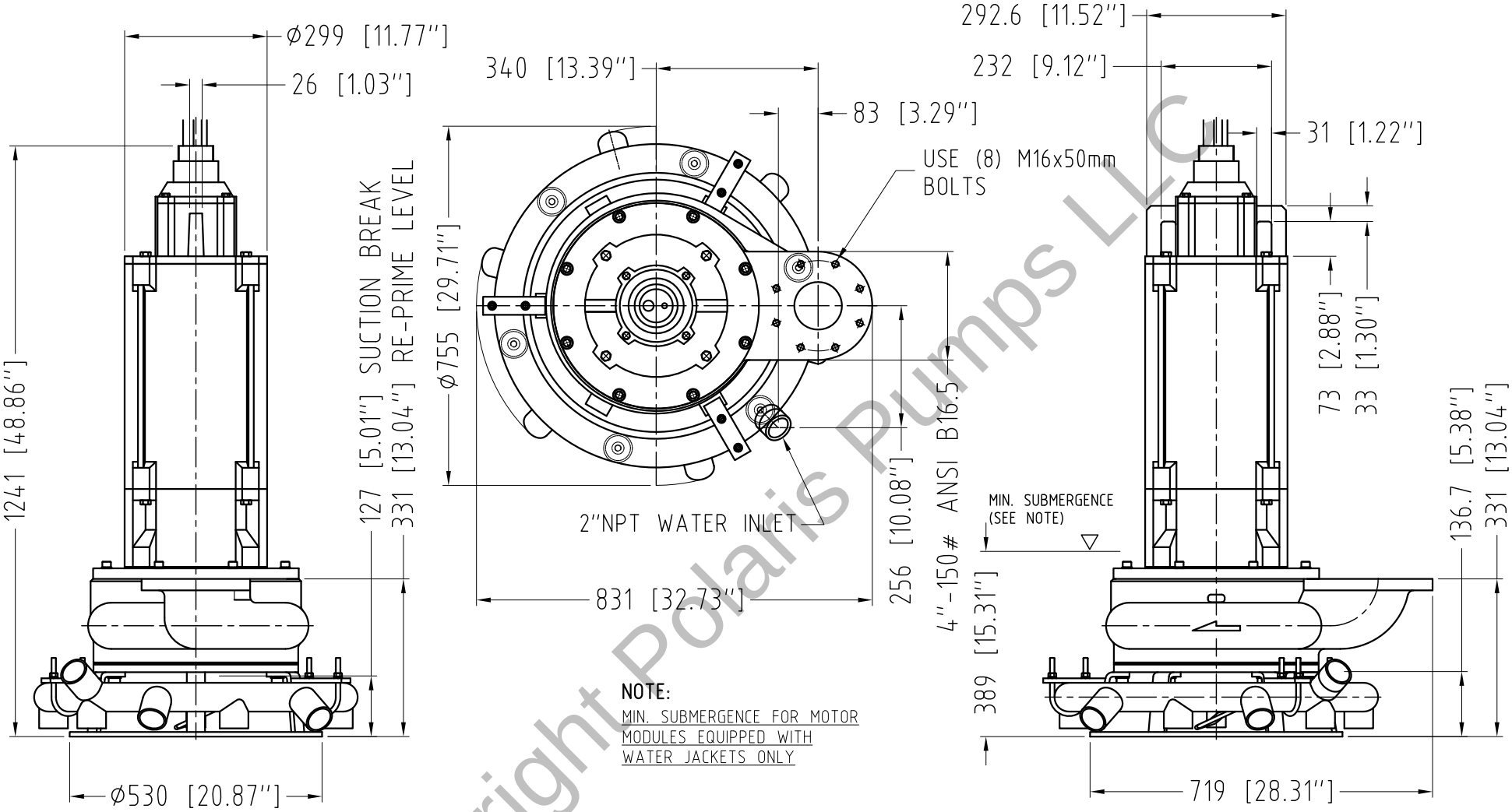

NOTE:
MIN. SUBMERGENCE FOR MOTOR MODULES EQUIPPED WITH WATER JACKETS ONLY

GENERAL ARRANGEMENT, WEIGHTS **TIP-MSP 4"MH TYPE 0 / A / C (25 - 40 HP 4P Motors)** **(15 - 25 HP 6P Motors)**	
DRAWING NBR.: **A0649**	REV.: **0**
EFFECTIVE DATE : **08/05/2012**	

PUMP MODEL	WEIGHT (lbs.)	WEIGHT (kg)
MSP 4"MH TYPE 0	827	376
MSP 4"MH TYPE A	834	379
MSP 4"MH TYPE C	832	378

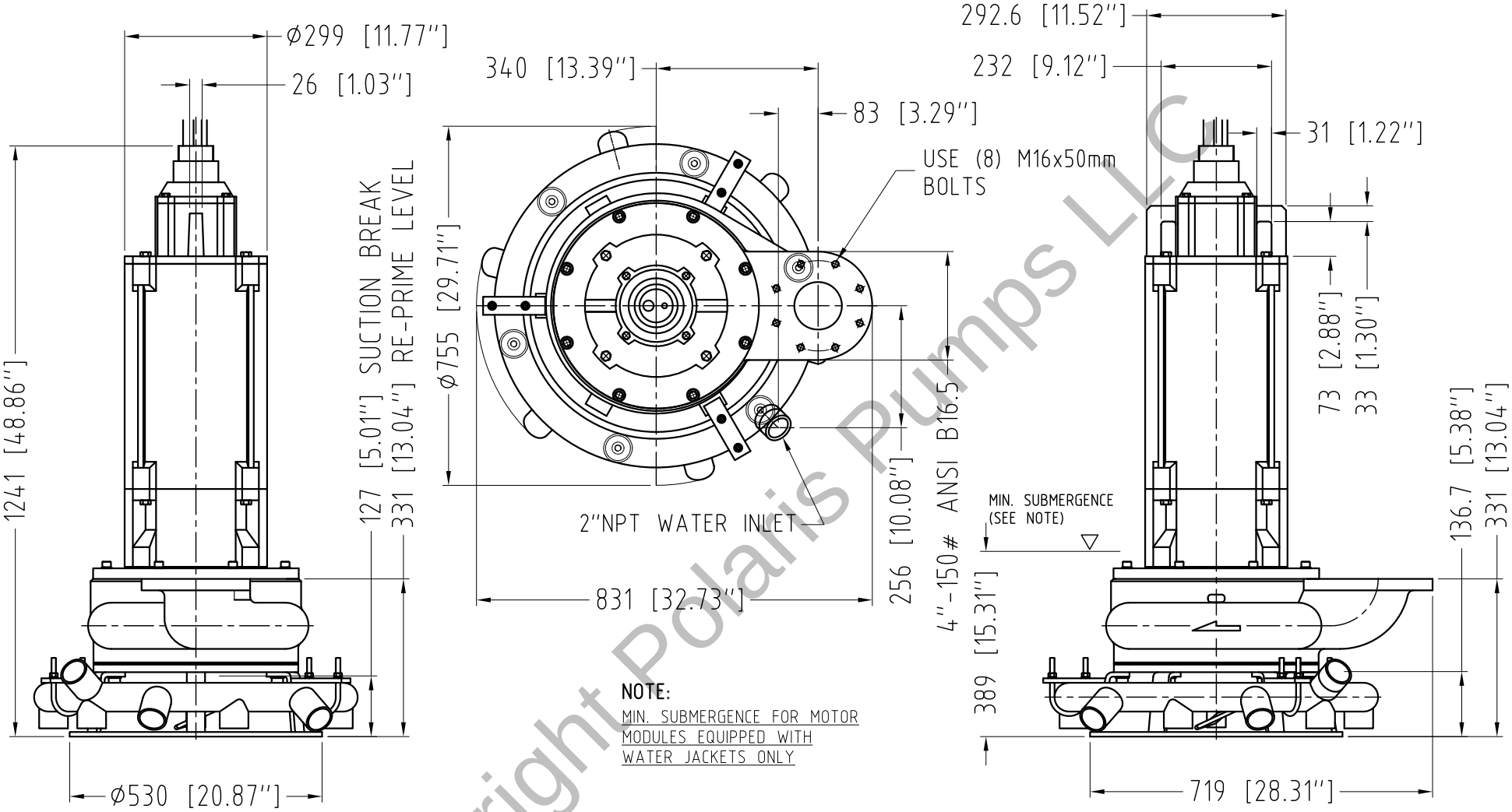

NOTE:
MIN. SUBMERGENCE FOR MOTOR MODULES EQUIPPED WITH WATER JACKETS ONLY

GENERAL ARRANGEMENT, WEIGHTS **TBM 100 MH-PHO, PBO, PVO (25 - 40 HP 4P Motors)** **(15 - 25 HP 6P Motors)**	
DRAWING NBR.: **A0649**	REV.: **0**
EFFECTIVE DATE : **08/05/2012**	

POLARIS PUMPS

PUMP MODEL	WEIGHT (lbs.)	WEIGHT (kg)
TBM 100 MH - PHO	827	376
TBM 100 MH - PBO	834	379
TBM 100 MH - PVO	832	378

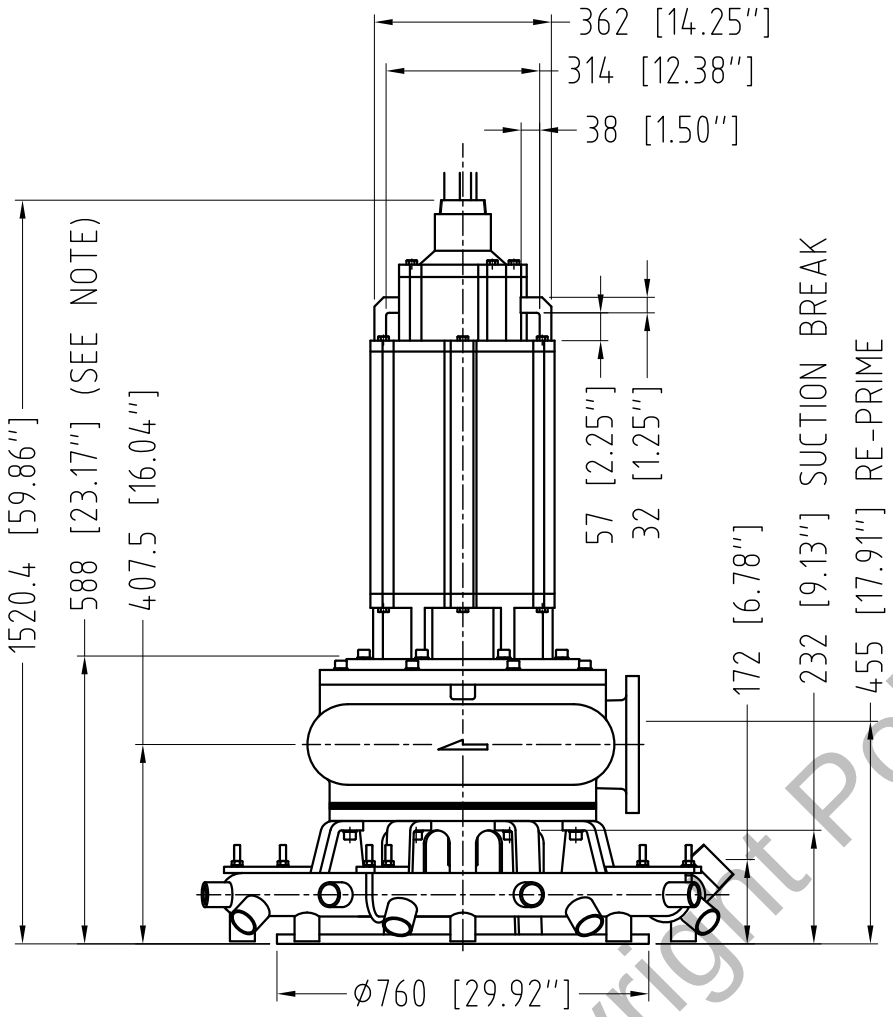

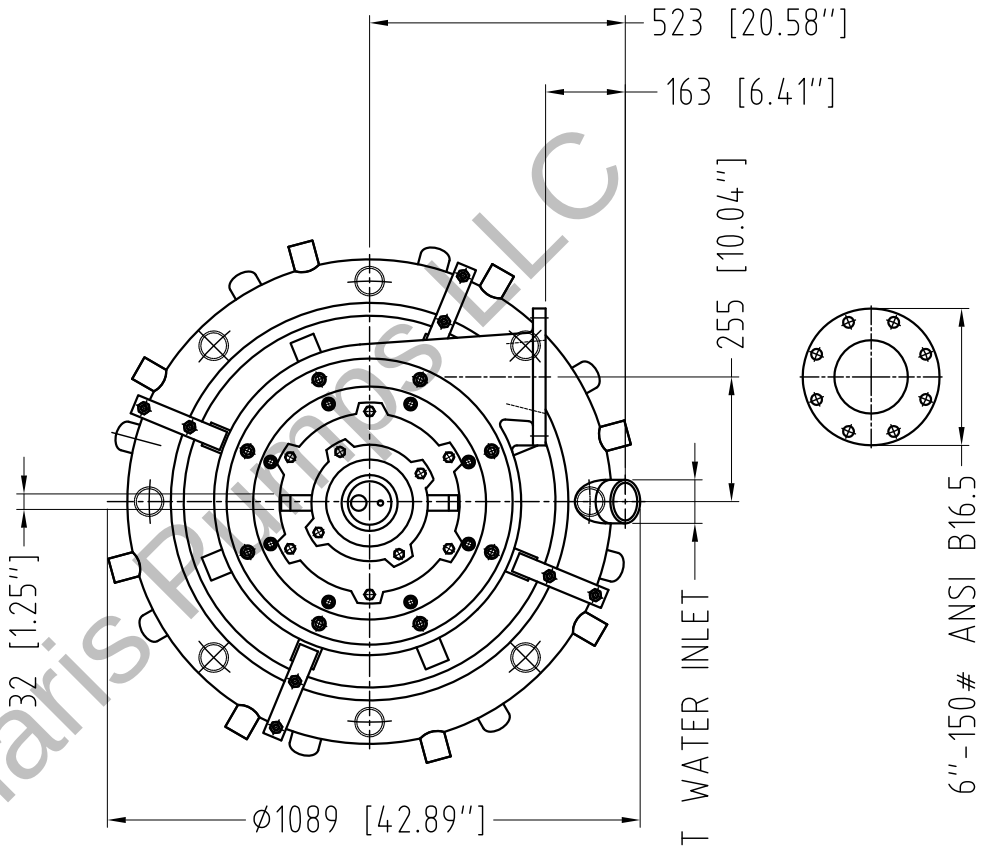

NOTE:
MIN. SUBMERGENCE FOR MOTOR MODULES EQUIPPED WITH WATER JACKETS ONLY

GENERAL ARRANGEMENT, WEIGHTS **TBM 150 MH-PHO, PBO, PVO (50 - 60 HP 6P Motors)** **OPTIONAL WATER JET RING (30 - 40 HP 8P Motors)**	
DRAWING NBR.: **A0644**	REV.: **0**
EFFECTIVE DATE : **08/05/2012**	

POLARIS PUMPS

PUMP MODEL	WEIGHT (lbs.)	WEIGHT (kg)
TBM 150 MH - PHO	2101	955
TBM 150 MH - PBO	2341	1064
TBM 150 MH - PVO	2361	1073

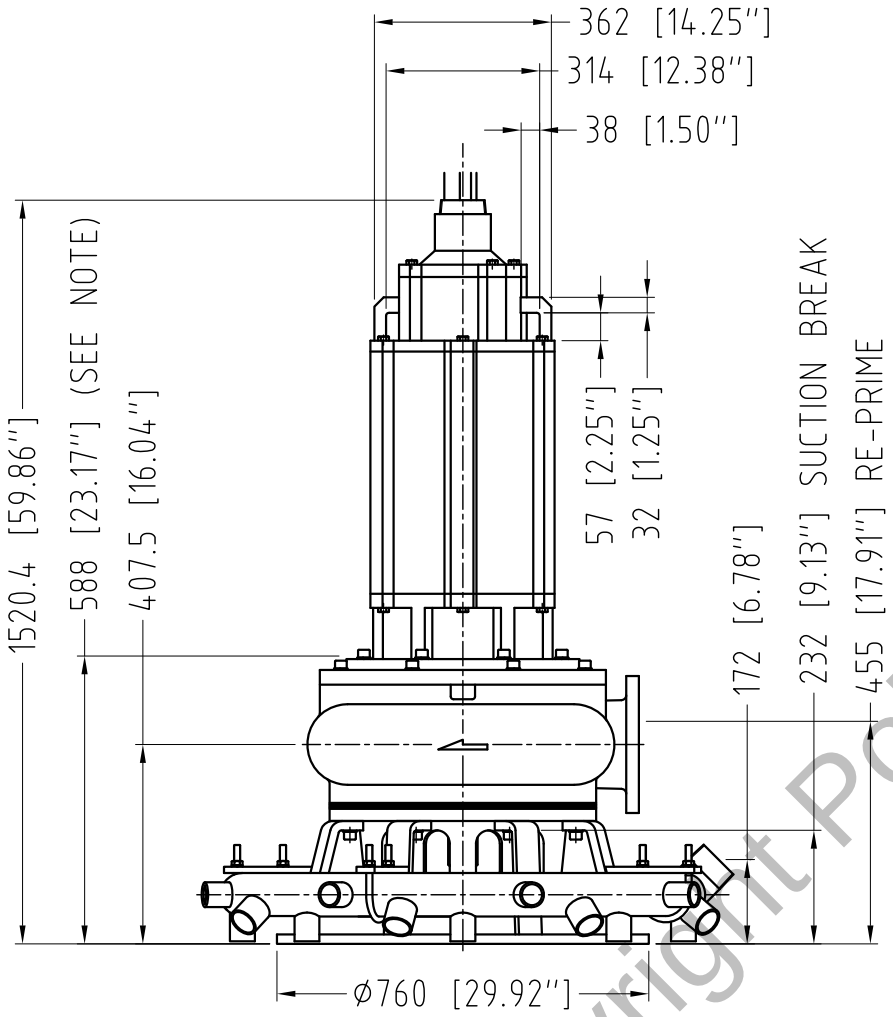

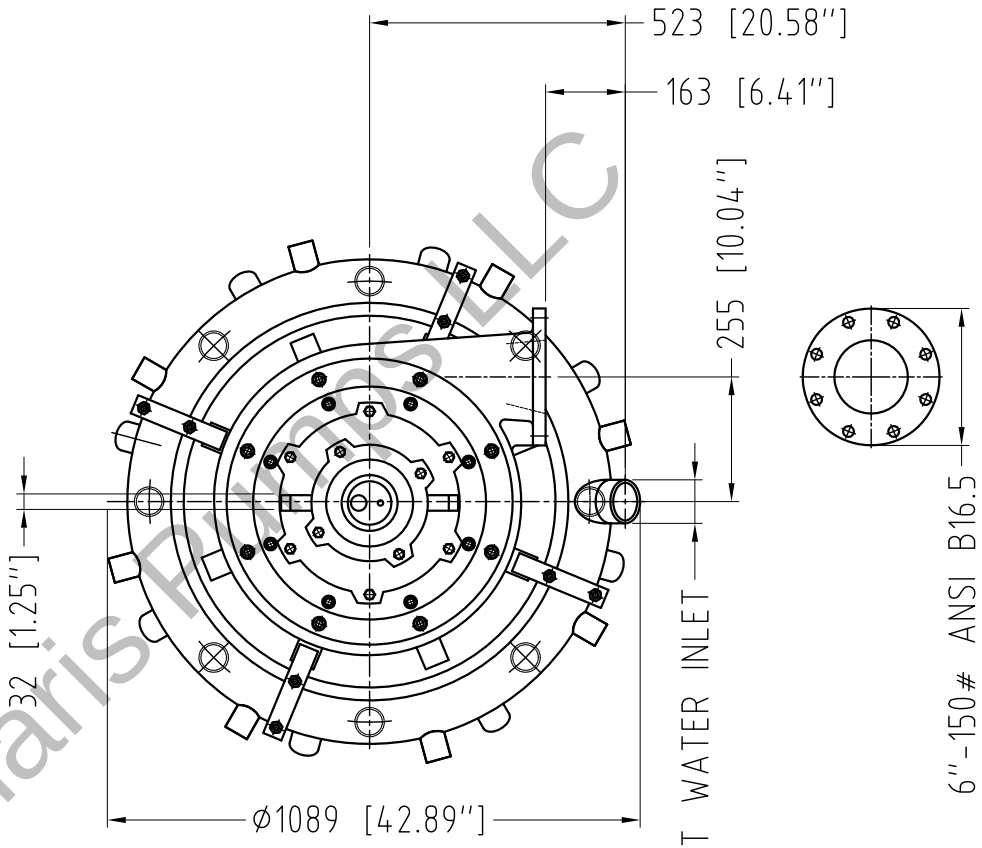

NOTE:
MIN. SUBMERGENCE FOR MOTOR MODULES EQUIPPED WITH WATER JACKETS ONLY

GENERAL ARRANGEMENT, WEIGHTS **TIP-MSP 6" MH TYPE O / A / C (50-60HP 6P Motors)** **OPTIONAL WATER JET RING (30-40 HP 8P Motors)**	
DRAWING NBR.: **A0644**	REV.: **0**
EFFECTIVE DATE : **08/05/2012**	

PUMP MODEL	WEIGHT (lbs.)	WEIGHT (kg)
MSP 6" MH TYPE O	2101	955
MSP 6" MH TYPE A	2341	1064
MSP 6" MH TYPE C	2361	1073

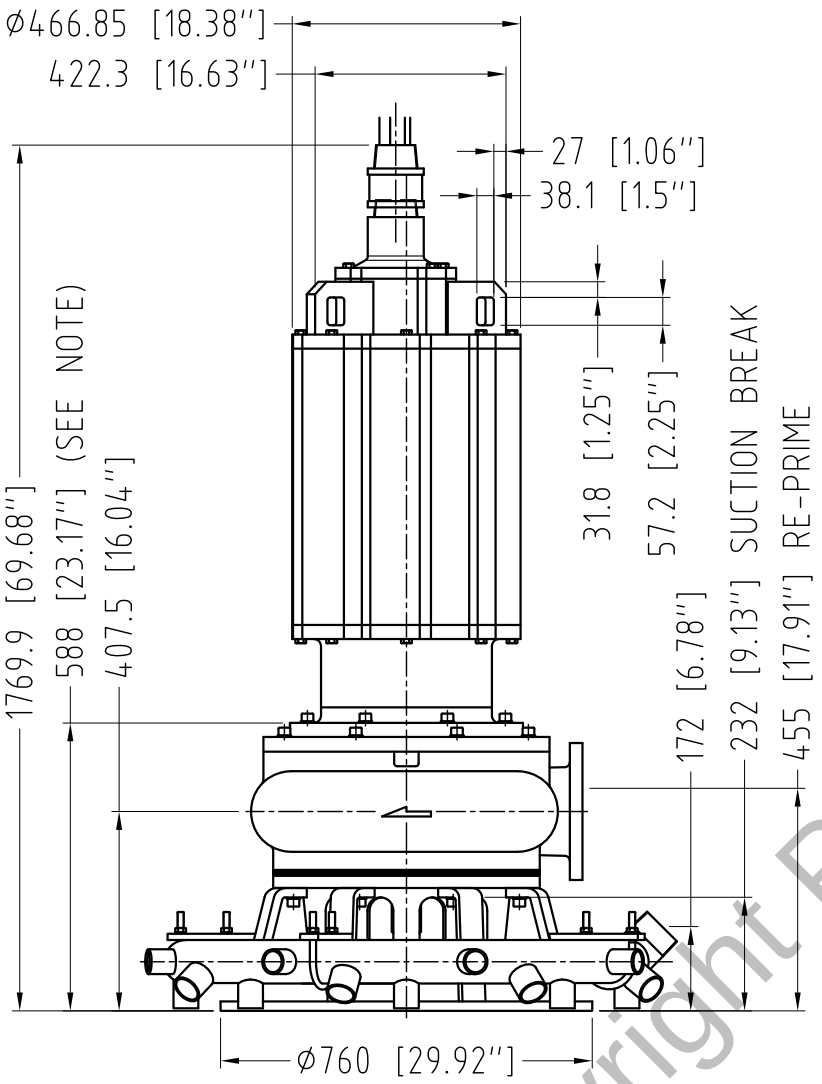

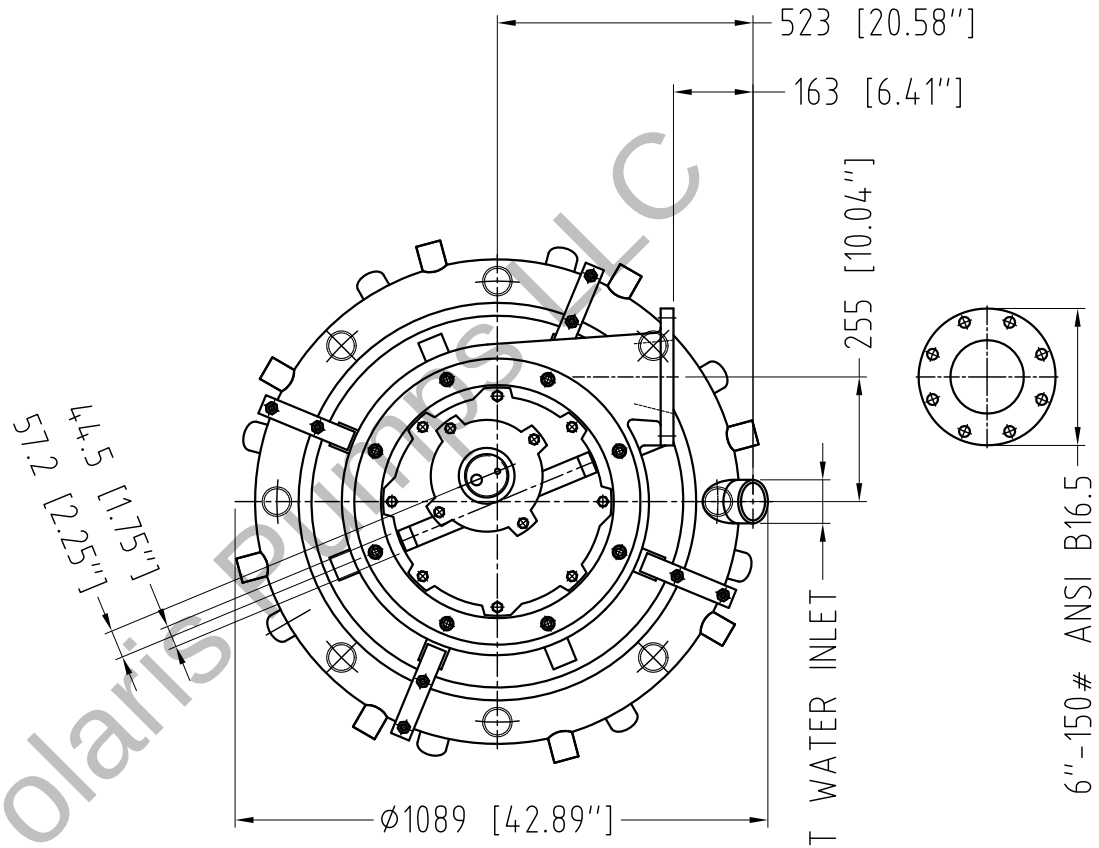

NOTE:
MIN. SUBMERGENCE FOR MOTOR MODULES EQUIPPED WITH WATER JACKETS ONLY

GENERAL ARRANGEMENT, WEIGHTS **TBM 150 MH-PHO, PBO, PVO (100-125HP 6P/8P Motors)** **OPTIONAL WATER JET RING (100-150 HP 4P Motors)**	
DRAWING NBR.: **A0643**	REV.: **0**
EFFECTIVE DATE : **08/05/2012**	

POLARIS PUMPS

PUMP MODEL	WEIGHT (lbs.)	WEIGHT (kg)
TBM 150 MH - PHO	2451	1114
TBM 150 MH - PBO	2691	1223
TBM 150 MH - PVO	2693	1224

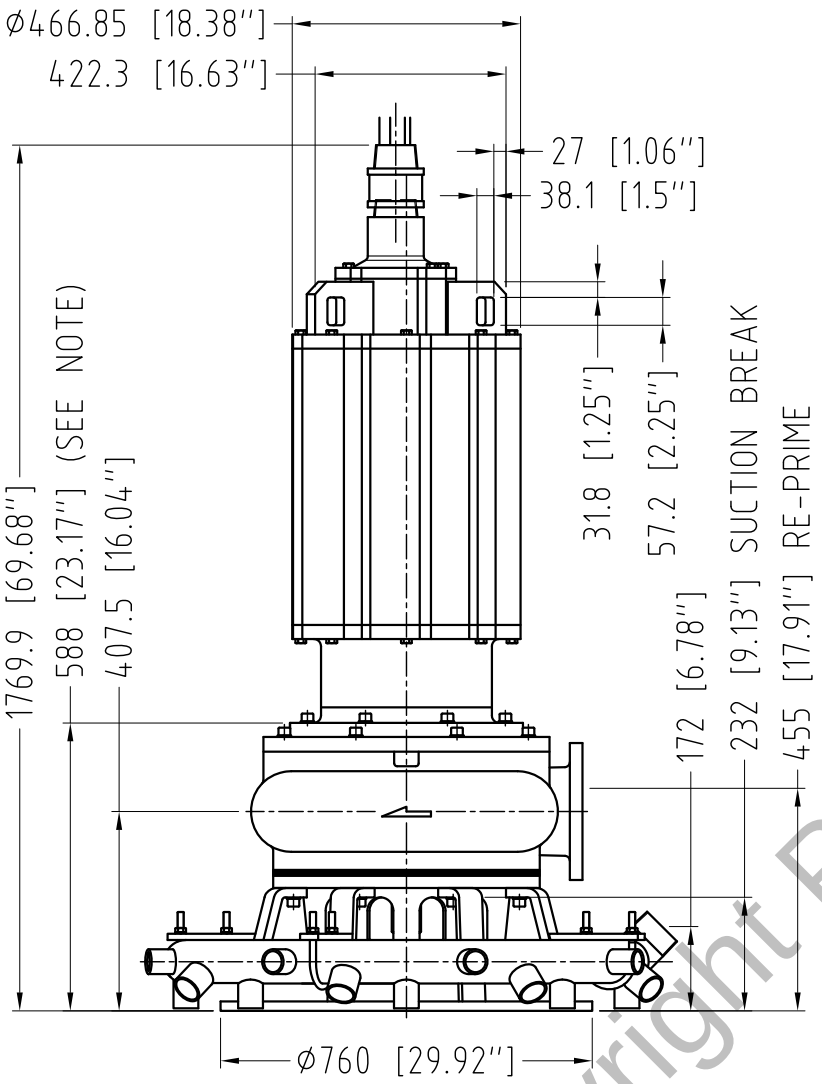

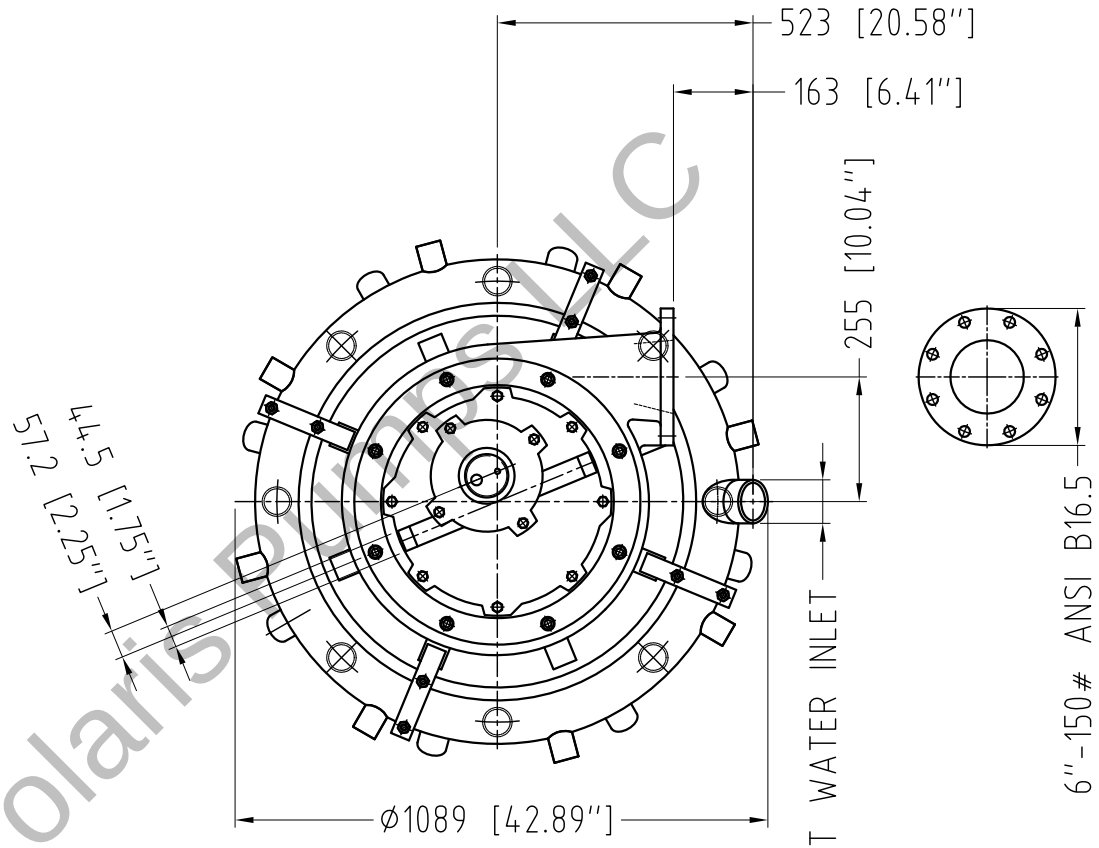

NOTE:
MIN. SUBMERGENCE FOR MOTOR MODULES EQUIPPED WITH WATER JACKETS ONLY

GENERAL ARRANGEMENT, WEIGHTS **TIP-MSP 6" MH TYPE O / A / C (100-125HP 6P/8P Motors)** **OPTIONAL WATER JET RING (100-150 HP 4P Motors)**	
DRAWING NBR.: **A0643**	REV.: **0**
EFFECTIVE DATE : **08/05/2012**	

PUMP MODEL	WEIGHT (lbs.)	WEIGHT (kg)
MSP 6" MH TYPE O	2451	1114
MSP 6" MH TYPE A	2691	1223
MSP 6" MH TYPE C	2693	1224

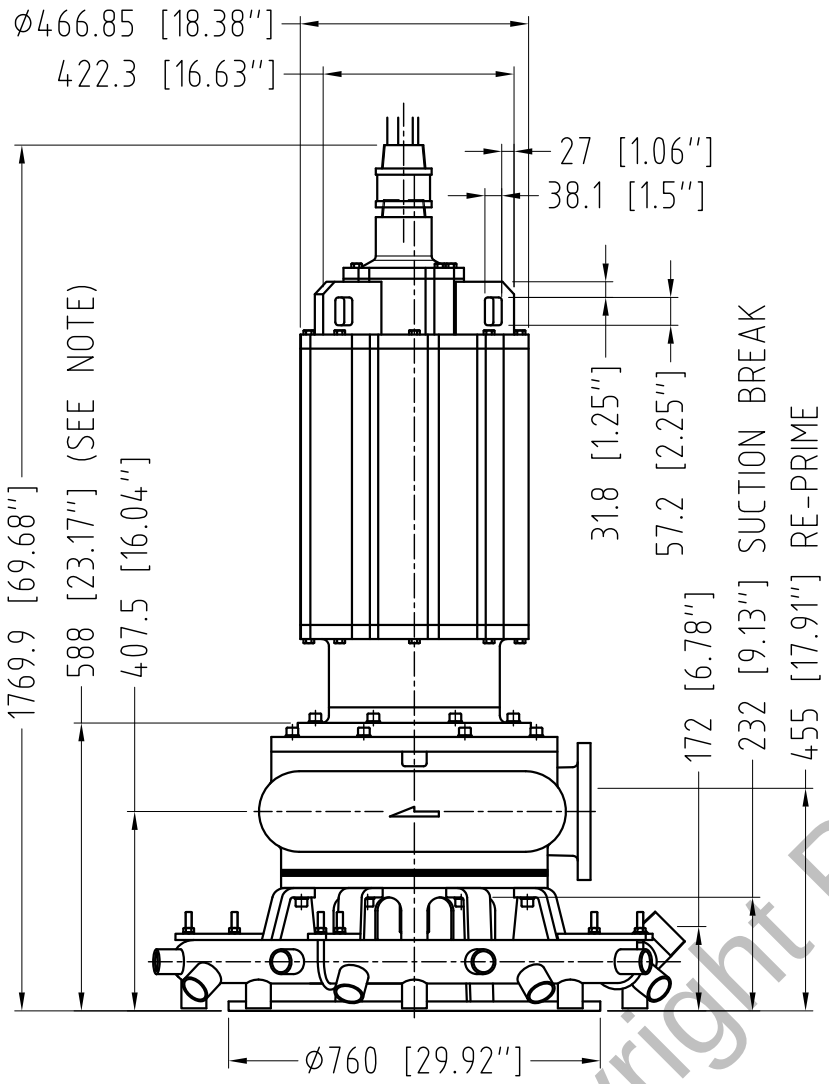

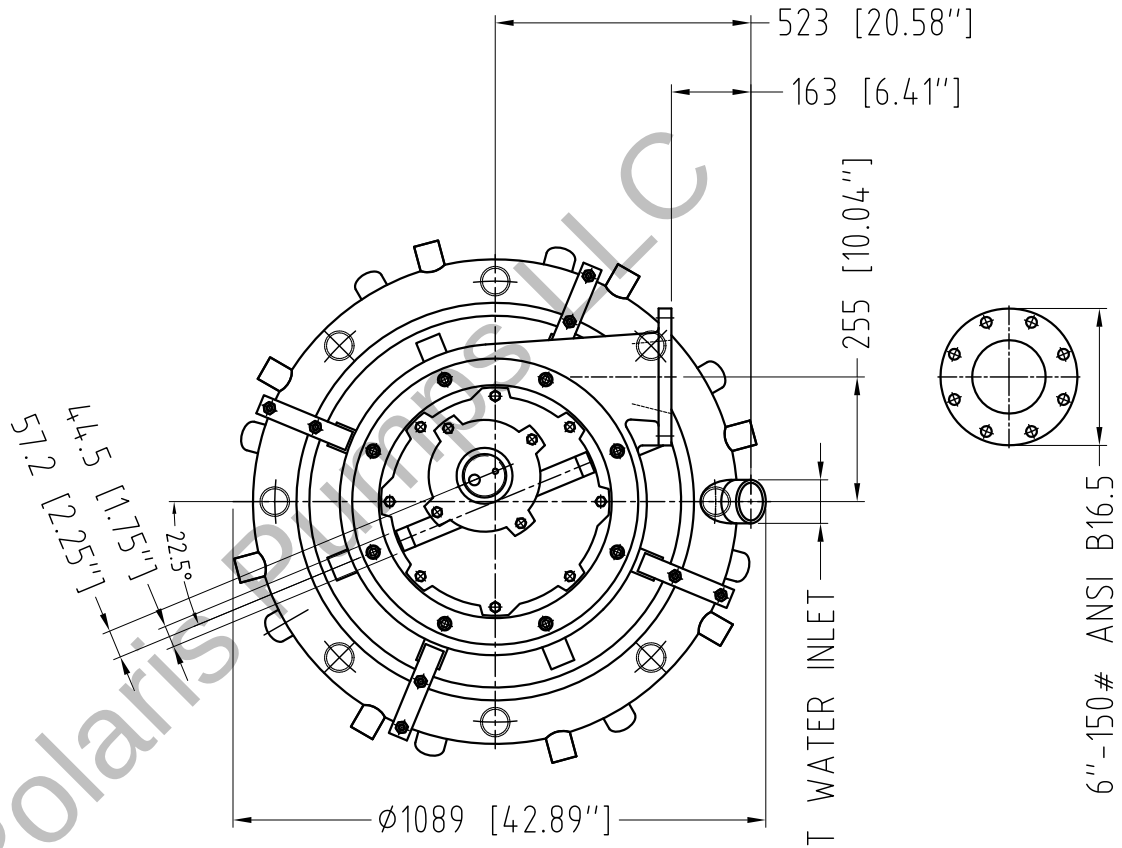

NOTE:
MIN. SUBMERGENCE FOR MOTOR MODULES EQUIPPED WITH WATER JACKETS ONLY

GENERAL ARRANGEMENT, WEIGHTS **TBM 150 MH-PHO, PBO, PVO (OPTIONAL WATER JET RING)** **(75HP 6P, 60 - 75 HP 8P Motors)**	
DRAWING NBR.: **A0642**	REV.: **0**
EFFECTIVE DATE : **08/05/2012**	

POLARIS PUMPS

PUMP MODEL	WEIGHT (lbs.)	WEIGHT (kg)
TBM 150 MH - PHO	2321	1055
TBM 150 MH - PBO	2338	1063
TBM 150 MH - PVO	2343	1065

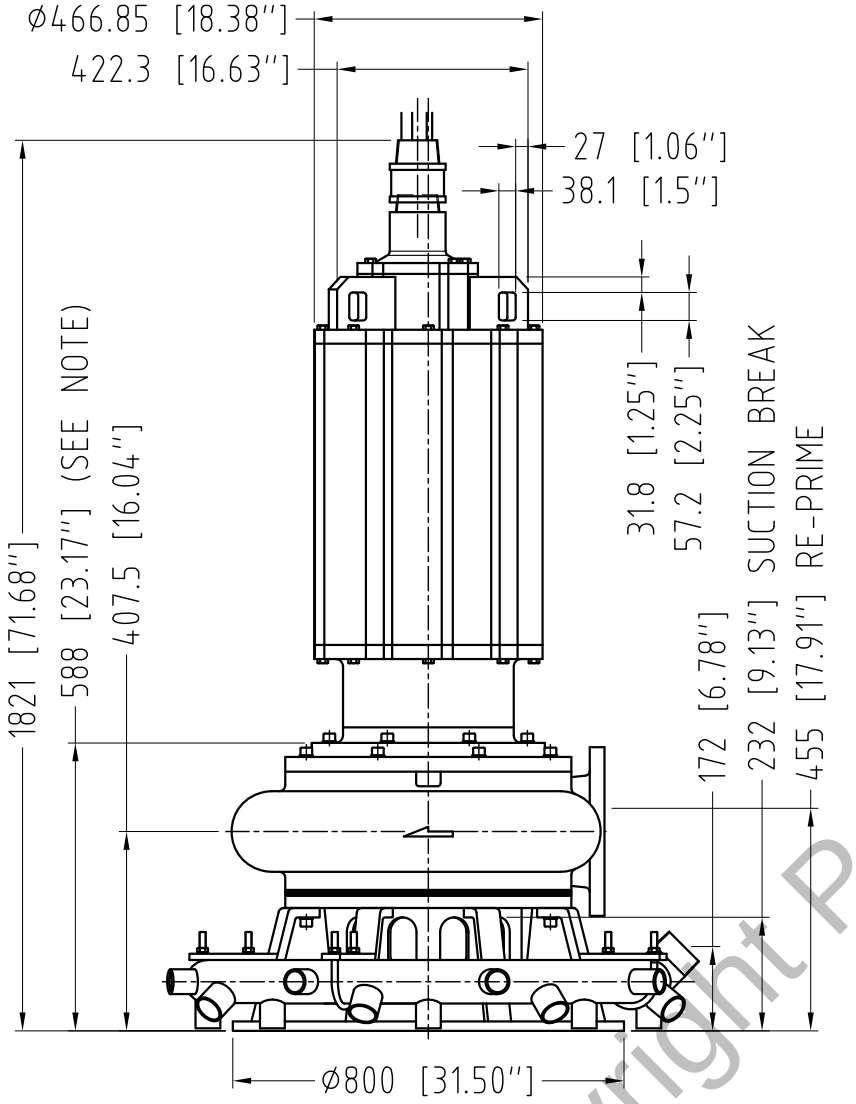

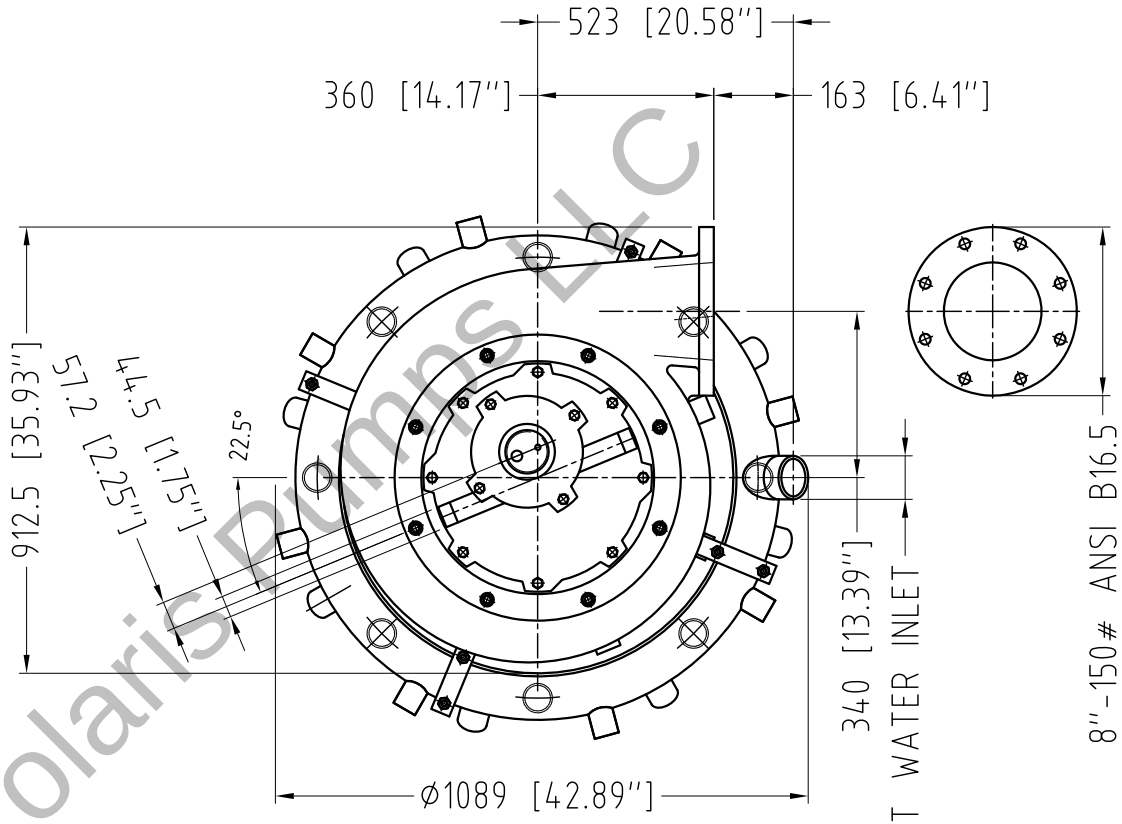

NOTE:
MIN. SUBMERGENCE FOR MOTOR MODULES EQUIPPED WITH WATER JACKETS ONLY

GENERAL ARRANGEMENT, WEIGHTS **TIP-MSP 8" MH TYPE O / A / C (150 HP 6P Motor)** **OPTIONAL WATER JET RING**	
DRAWING NBR.: **A0653**	REV.: **0**
EFFECTIVE DATE : **08/05/2012**	

PUMP MODEL	WEIGHT (lbs.)	WEIGHT (kg)
MSP 8" MH TYPE O	2785	1266
MSP 8" MH TYPE A	2805	1275
MSP 8" MH TYPE C	2810	1277

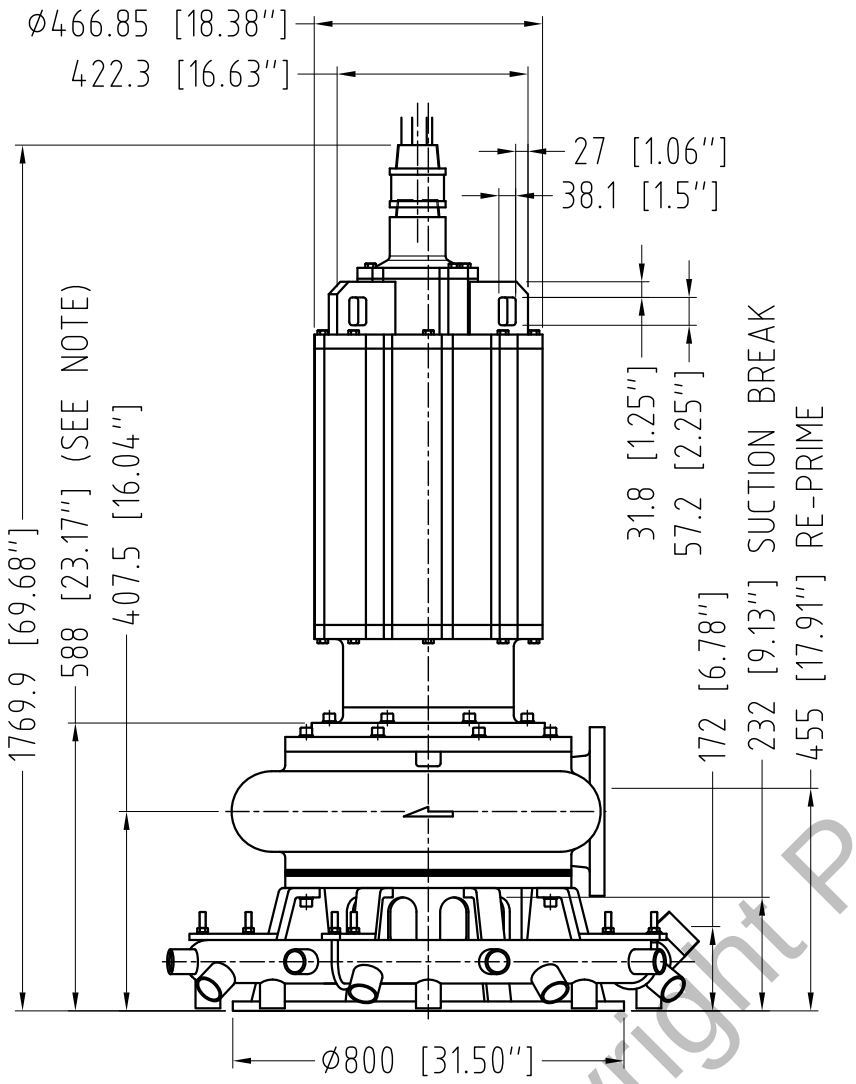

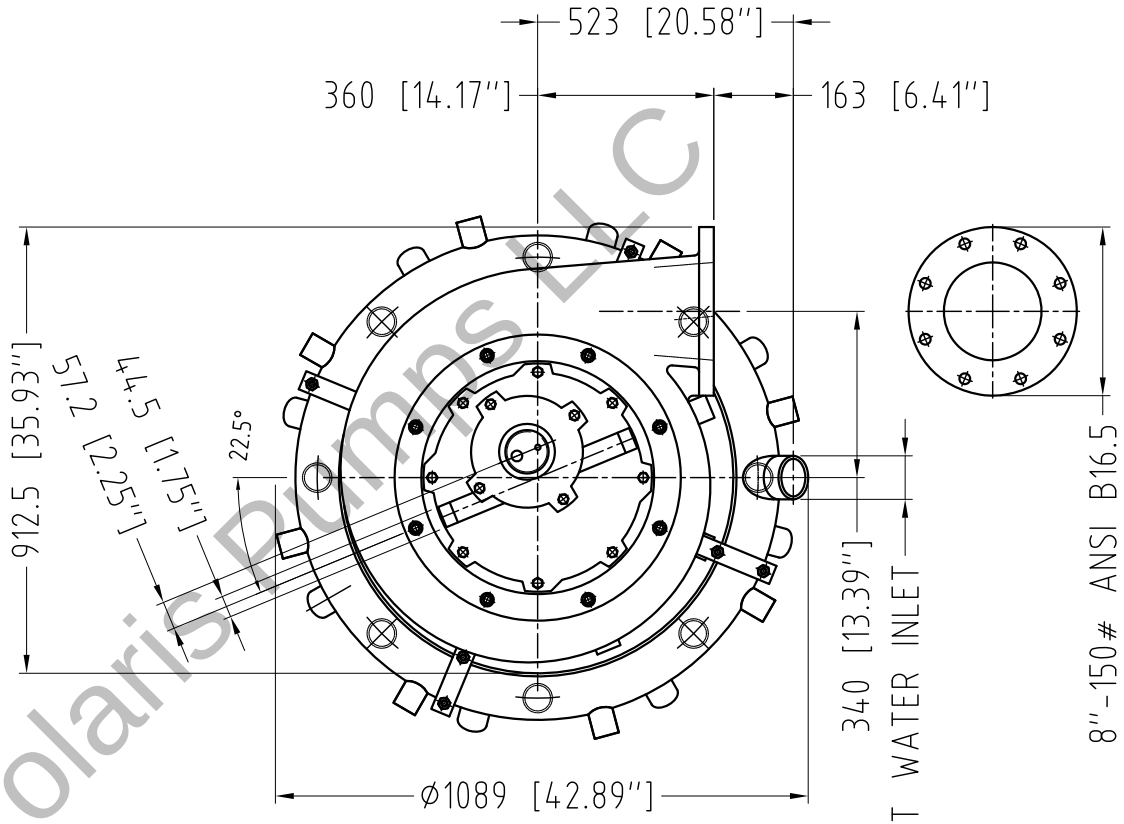

NOTE:
MIN. SUBMERGENCE FOR MOTOR MODULES EQUIPPED WITH WATER JACKETS ONLY

GENERAL ARRANGEMENT, WEIGHTS **TBM 200 MH-PHO, PBO, PVO (75 - 125 HP 6P Motors)** **OPTIONAL WATER JET RING (60 - 150 HP 8P Motors)**	
DRAWING NBR.: **A0652**	REV.: **0**
EFFECTIVE DATE : **08/05/2012**	

POLARIS PUMPS

PUMP MODEL	WEIGHT (lbs.)	WEIGHT (kg)
TBM 200 MH - PHO	2785	1266
TBM 200 MH - PBO	2805	1275
TBM 200 MH - PVO	2810	1277

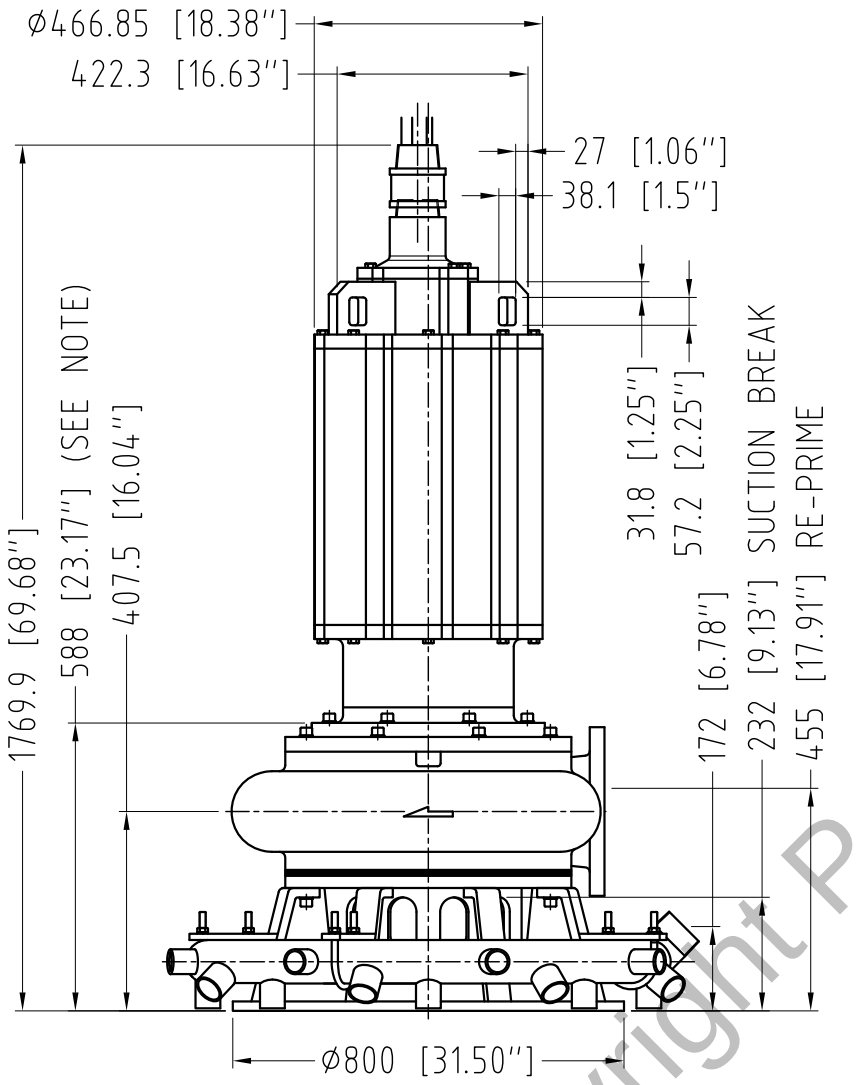

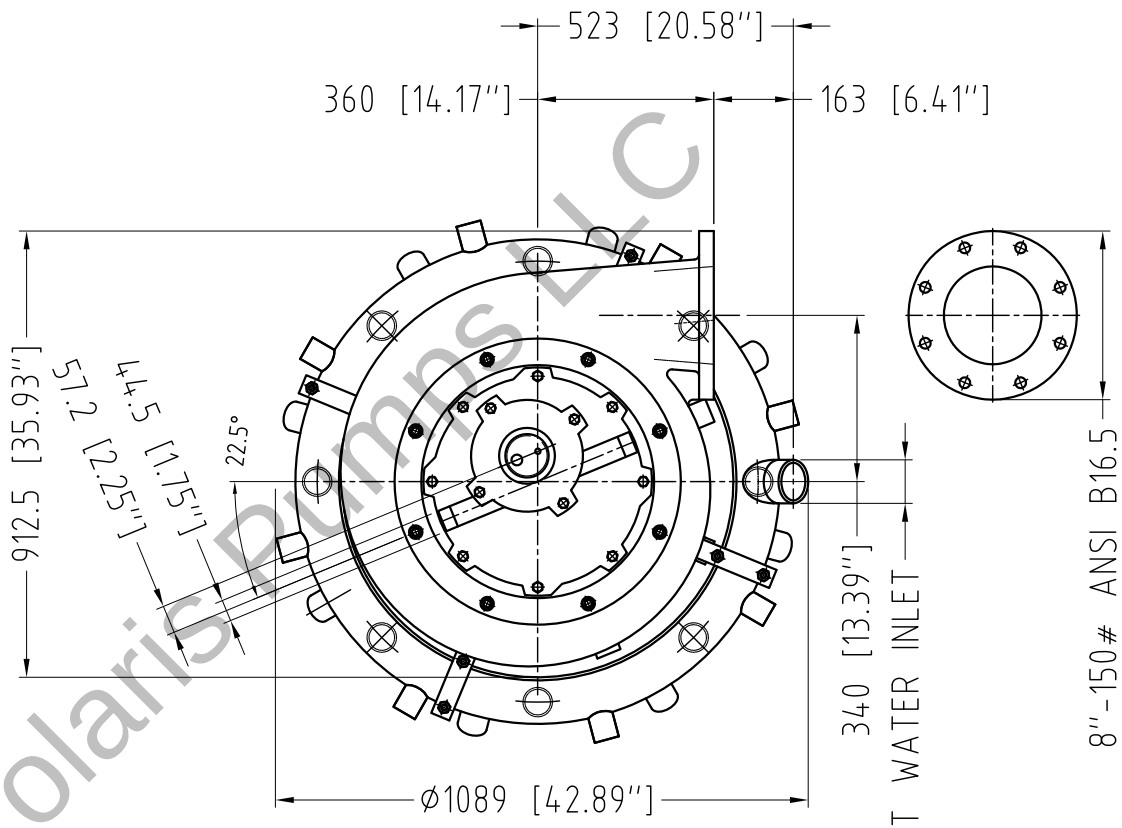

NOTE:
MIN. SUBMERGENCE FOR MOTOR MODULES EQUIPPED WITH WATER JACKETS ONLY

GENERAL ARRANGEMENT, WEIGHTS **TIP-MSP 8" MH TYPE O / A / C (75 - 125 HP 6P Motors)** **OPTIONAL WATER JET RING (60 - 150 HP 8P Motors)**	
DRAWING NBR.: **A0652**	REV.: **0**
EFFECTIVE DATE : **08/05/2012**	

PUMP MODEL	WEIGHT (lbs.)	WEIGHT (kg)
MSP 8" MH TYPE O	2785	1266
MSP 8" MH TYPE A	2805	1275
MSP 8" MH TYPE C	2810	1277

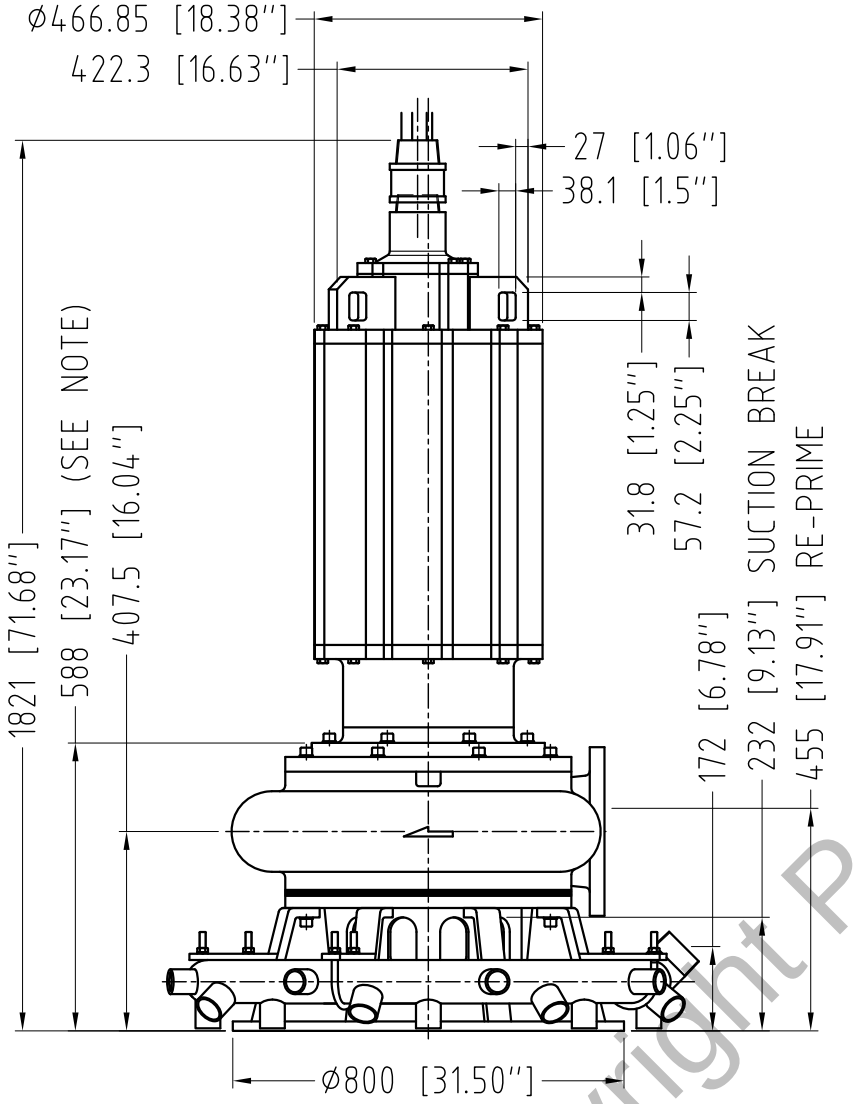

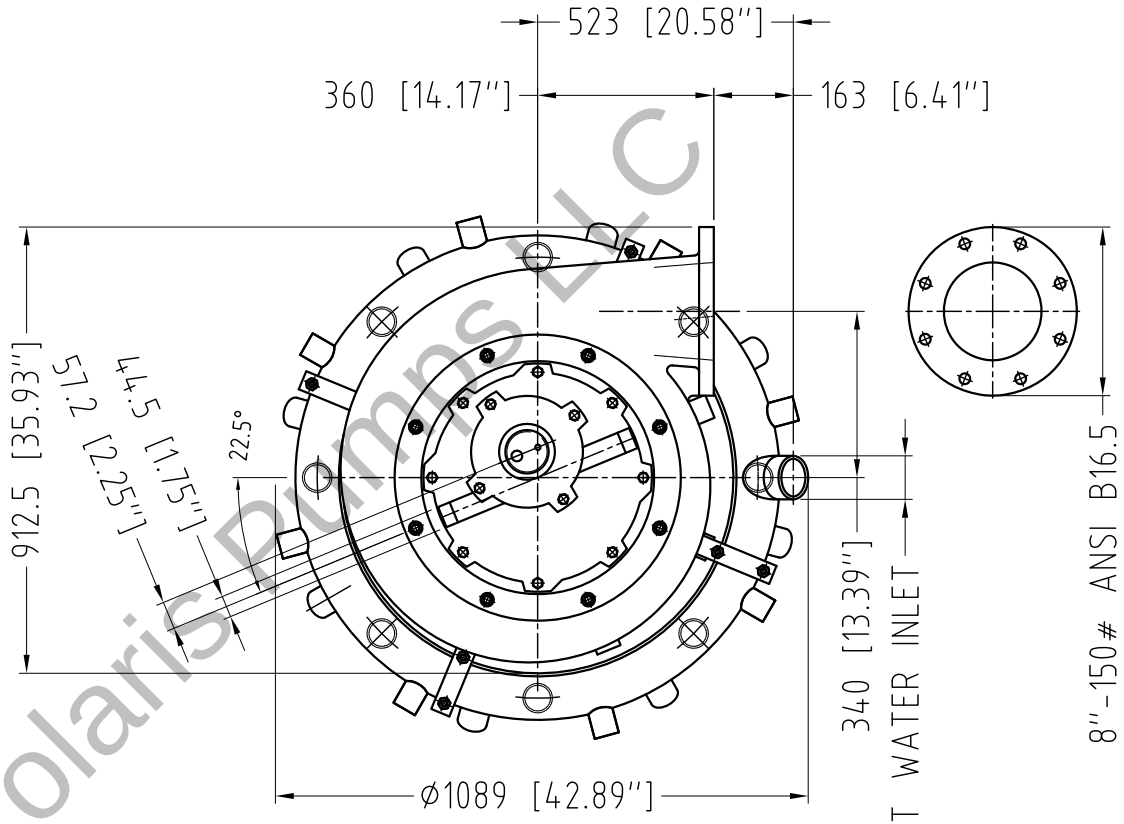

NOTE:
MIN. SUBMERGENCE FOR MOTOR MODULES EQUIPPED WITH WATER JACKETS ONLY

GENERAL ARRANGEMENT, WEIGHTS **TBM 200 MH-PHO, PBO, PVO (150 HP 6P Motor)** **OPTIONAL WATER JET RING**	
DRAWING NBR.: **A0653**	REV.: **0**
EFFECTIVE DATE : **08/05/2012**	

POLARIS PUMPS

PUMP MODEL	WEIGHT (lbs.)	WEIGHT (kg)
TBM 200 MH - PHO	2785	1266
TBM 200 MH - PBO	2805	1275
TBM 200 MH - PVO	2810	1277

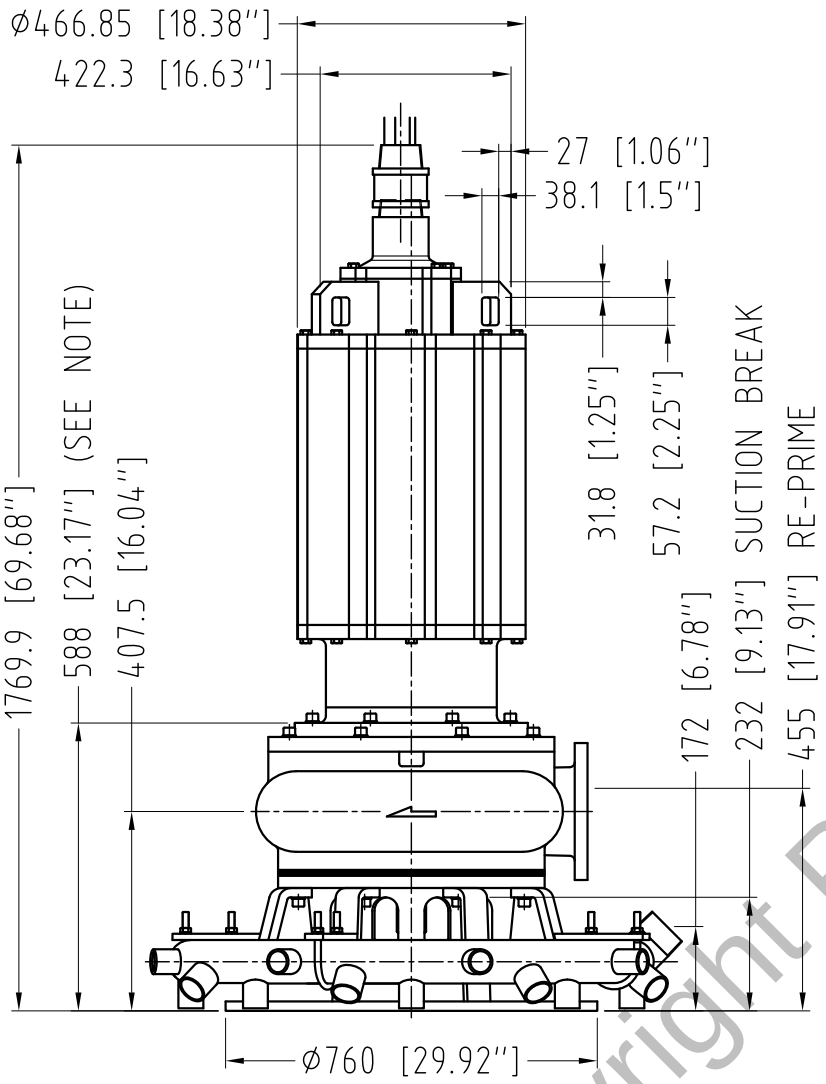

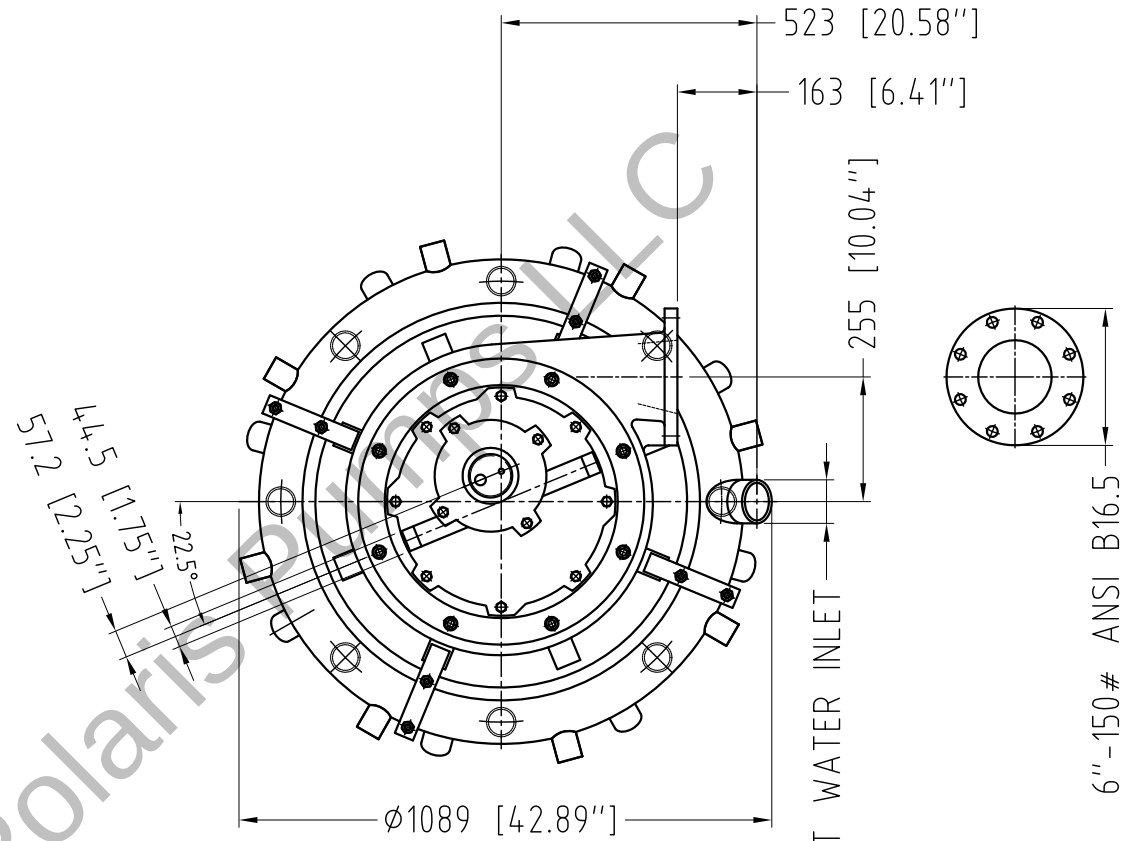

NOTE:
MIN. SUBMERGENCE FOR MOTOR MODULES EQUIPPED WITH WATER JACKETS ONLY

GENERAL ARRANGEMENT, WEIGHTS **TIP-MSP 6" MH TYPE O / A / C (OPTIONAL WATER JET RING)** **(75HP 6P, 60 - 75 HP 8P Motors)**	
DRAWING NBR.: **A0642**	REV.: **0**
EFFECTIVE DATE : **08/05/2012**	

PUMP MODEL	WEIGHT (lbs.)	WEIGHT (kg)
MSP 6"MH TYPE O	2321	1055
MSP 6"MH TYPE A	2338	1063
MSP 6"MH TYPE C	2343	1065